LDB® SLEWING DRIVE

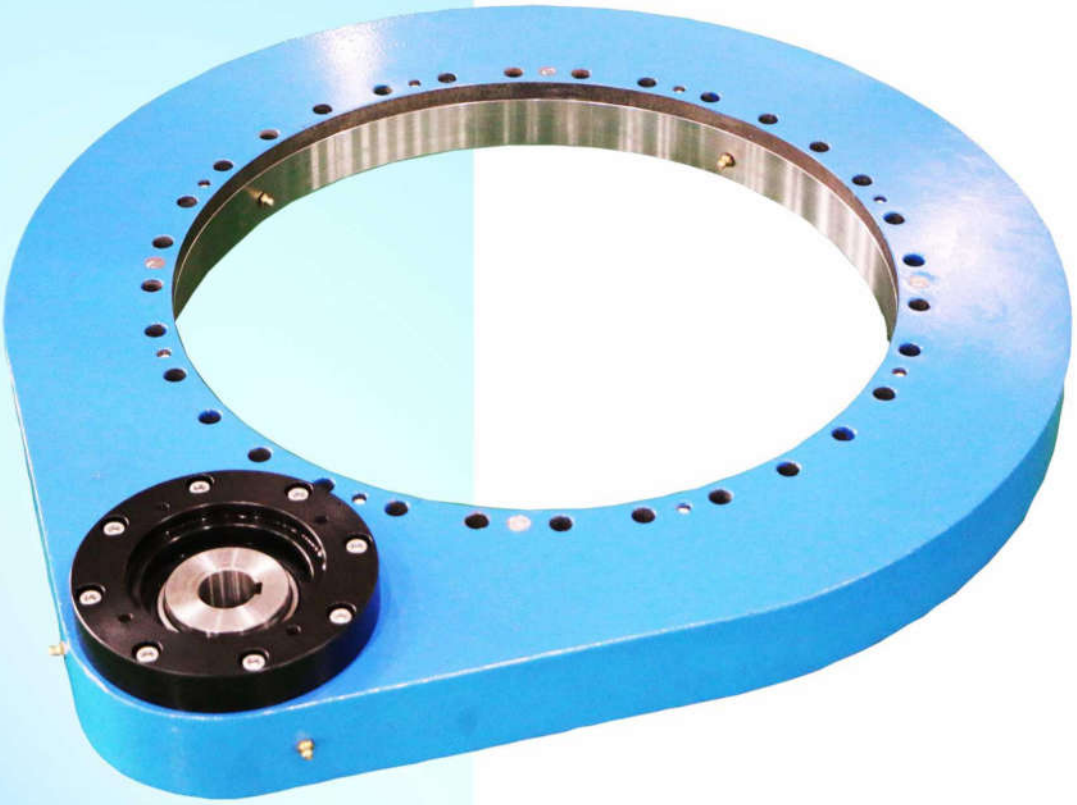

精密直齿驱动

Precision Spur Gear Slewing Drive

洛阳隆达轴承有限公司

LUOYANG LONGDA BEARING CO.,LTD

TÜV SÜD ISO 9001

【企业简介】 Company Profile

洛阳隆达轴承有限公司成立于1999年，位于洛阳市宜阳轴承产业集聚区，占地23亩。公司秉承“精心制造、服务全球”的企业愿景，经过20年的发展，成为了一家专业研发生产转盘轴承(回转支承)和回转驱动的企业。

产品广泛应用于自动化控制、智能机器人、特种车辆、机床回转台、林业机械、起重机械等领域。

我们的产品远销全球71个国家和地区，并与德国、意大利、美国等国家的客户建立了长期的贸易合作关系。

公司先后荣获高新技术企业、市级企业研发中心、河南省科技型中小企业、河南电子商务企业、中原股权交易中心展示企业等荣誉称号，并通过了TUV SUD ISO9001：2015质量管理体系认证。

隆达轴承紧紧围绕“做世界知名转盘轴承制造商”这一总体发展思路，加快企业转型升级和跨越发展，全力推动企业向创新驱动型、绿色低碳型、智能制造型方向发展。

Luoyang Longda Bearing Co., Ltd. was founded in 1999, is located in Yiyang bearing industry zone, Luoyang city covers an area of 23 mu. company adhering to the "Manufacture Elaborately sewe the world" corporate vision, after 20 years of development, the company has become a professional research, development and production of slewing bearing (slewing ring) and slewing drive enterprise.

Products are widely used in automatic control, intelligent robots, special vehicles, machine tool rotary tables, forestry machinery, lifting machinery and other fields.

Our products have been exporting to 71 countries and regions we have established long-term trada cooperative relations with many customers in Germany, Italy, America, etc.

The company has successively won the honorary titles of high-tech enterprise, city-level enterprise R & D center, Henan science and technology small and medium-sized enterprise, Henan e-commerce enterprise, Zhongyuan equity trading center display enterprise, etc. We also passed TUV SUD ISO9001: 2015 quality management system certification.

LDB closely focuses on the overall development idea of "To be the world famous slewing bearing manufacturer" , speed up the transformation and upgrading of enterprise and leapfrog development, fully promotes the development of enterprise towards innovation-driven, green and low-carbon and intelligent manufacturing.

【资质证书】
Qualification certificate

LDB® SLEWING DRIVE

HENAN SMALL AND
MEDIUM-SIZED SCI-TECH ENTERPRISE

HENAN E-COMMERCE ENTERPRISE

NEW HIGH-TECH ENTERPRISE

MUNICIPAL ENTERPRISE R&D CENTER

ISO CERTIFICATE

LETTER OF PATENT

【生产加工】
Production and processing

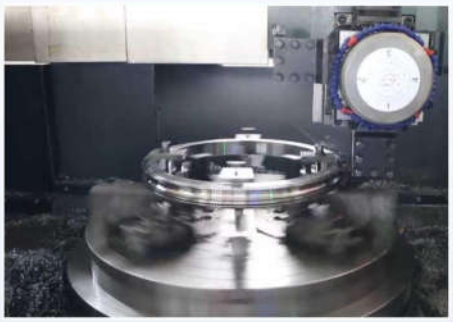

◆加工细节展示
Machining detail

◆生产车间
Workshop

【产品介绍】
Product Introduction

LDB® SLEWING DRIVE

【1】替代内、外齿转盘轴承加小齿轮结构，紧凑型设计有效节省安装空间，易于集成到现有的应用单元中。

【2】传动效率高，转速快。

【3】能承受轴向载荷，径向载荷，倾覆力矩。

【4】全防护设计能有效延长使用寿命，降低维护成本，提高操作人员安全性，防护等级达到IP65。

【5】外观干净整洁。

【6】根据不同工况，有三种系列可供选择，并可快速定制化设计。

[1] Replace the structure of slewing bearing with internal gear I external gear with pinion, the compact design can effectively save installation space and be easily integrated into existing application units.

[2] High transmission efficiency and high rotation speed.

[3] Can withstand axial load, radial load and tilting moment.

[4] The full protection design can effectively extend the service life, reduce the maintenance cost, improve the safety of operators and the protection grade can reach IP65.

[5] Appearance clean and tidy.

[6] According to different working conditions, there are three series models to choose and can quickly make customized design.

【编号说明】
Code Description

SG－I－0229－25－S－C－E

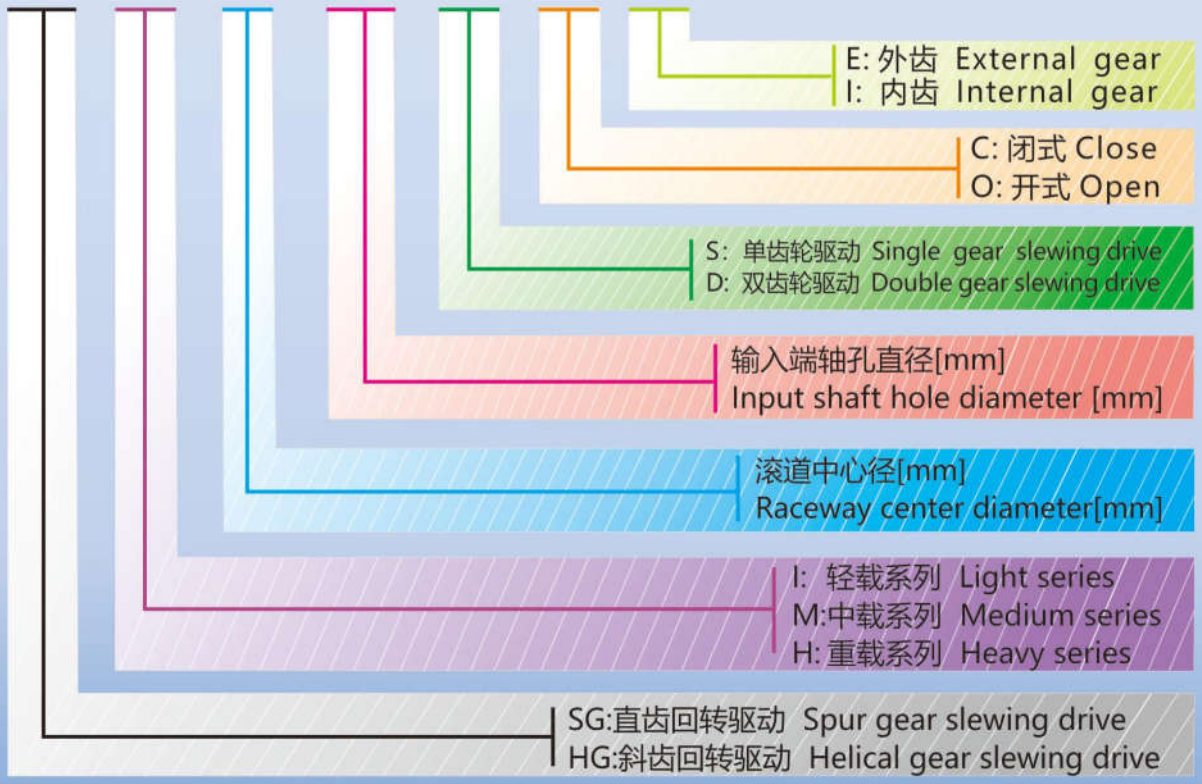

【产品应用】
Product application

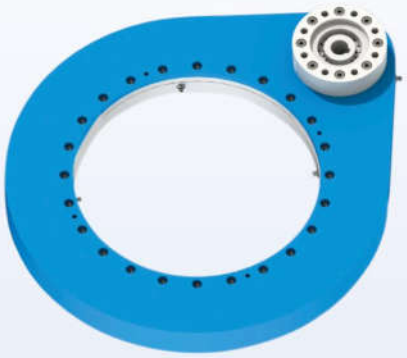

【SG-I-0311】

◆机械臂 Mechanical arm

【SG-M-0710】

◆汽车吊 Truck crane

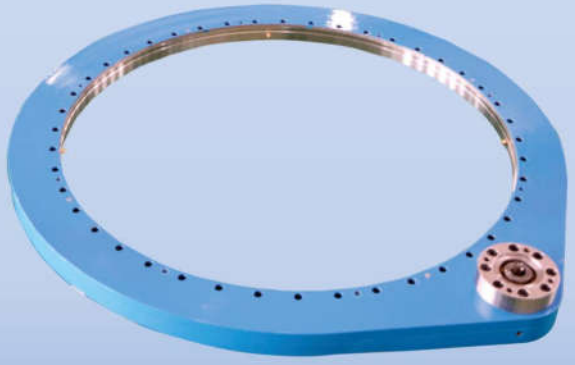

【SG-I-0941】

◆自动化设备 Automation equipment

【产品应用】
Product application

LDB® SLEWING DRIVE

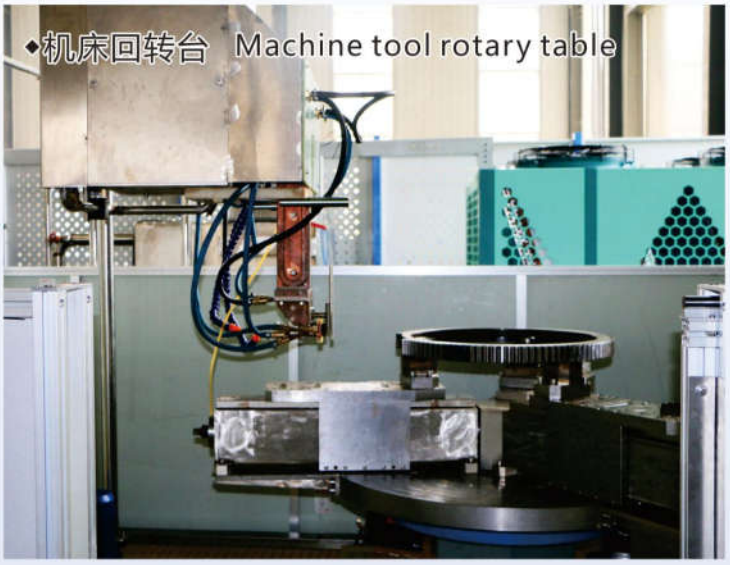

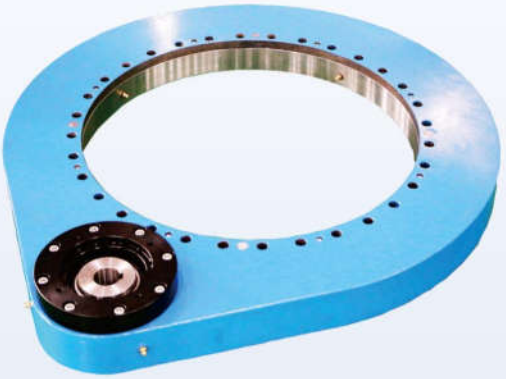

【SG-M-0541】

【SG-I-0229】

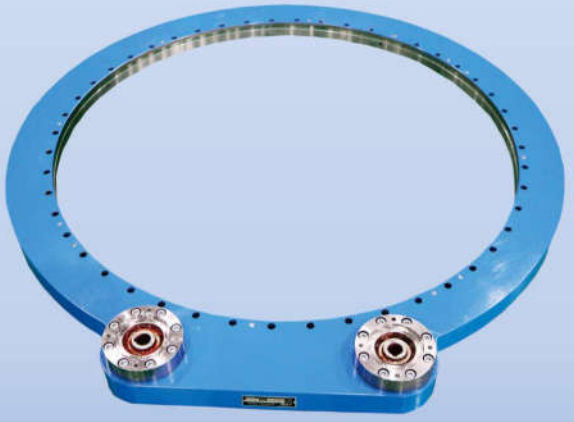

【SG-I-1091】

【SG-I系列】
SG-I Series

【SG-I-0229】

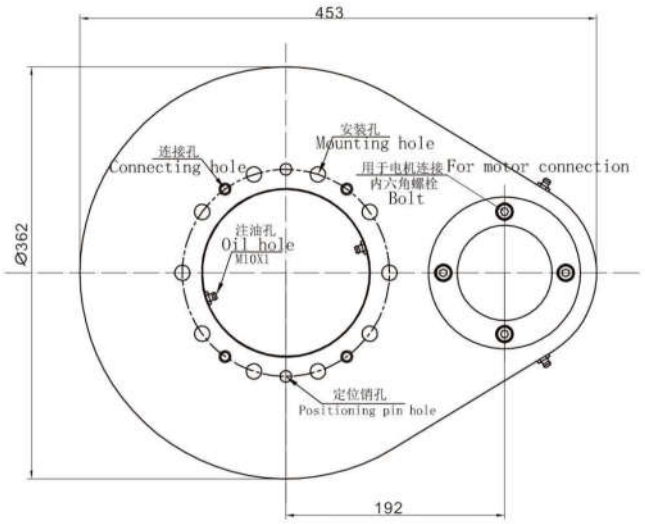

回转驱动的润滑
Lubrication of slewing drive
内径上有2个M10X1的注油嘴
2 M10X1 grease nipples on the inner ring
壳体两侧边有2个M8X1的注油嘴
2 M8X1 grease nipples on the housing
回转驱动应预先润滑
Slewing drive supplied pre-lubricated

模数/Module	m	[mm]	4
齿圈齿数/Teeth number of wheel	z2	[-]	81
小齿轮齿数/Teeth number of pinion	z1	[-]	15
总传动比/Overall gear ration	i	[-]	5.40
最大扭矩/Max torque SFS=1.75	$M_{d\ max}$	[Nm]	2852
标准扭矩/Nom torque SF=1 at n=5rpm	$M_{d\ nom}$	[Nm]	2476
最大保持扭矩/Max holding torque	M_h	[Nm]	2852
径向额定静载荷/Radial static load	$C_{o\ rad}$	[kN]	151
轴向额定静载荷/Axial static load	$C_{o\ ax}$	[kN]	439
径向额定动载荷/Radial dynamic load	C_{rad}	[kN]	143
轴向额定动载荷/Axial dynamic load	C_{ax}	[kN]	168
重量（包括RE-300液压马达的12KG)/Weight		[kg]	46
压力差/Pressure differential	ΔP	[bar]	150
油留量/Oil flow	Q	[l/min]	13
输出转速/Output speed	n	[min-1]	5
最大可达扭矩/Max achievable torque	M_d	[Nm]	2852

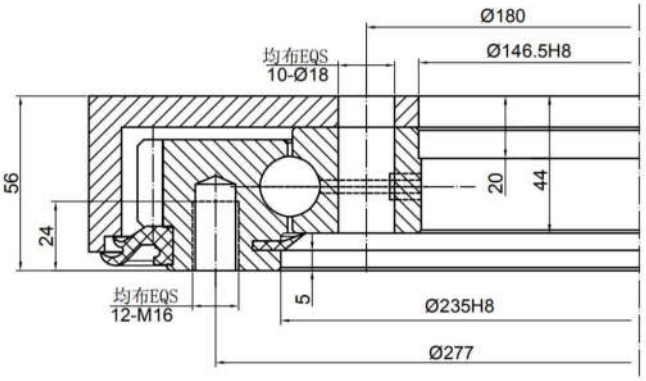

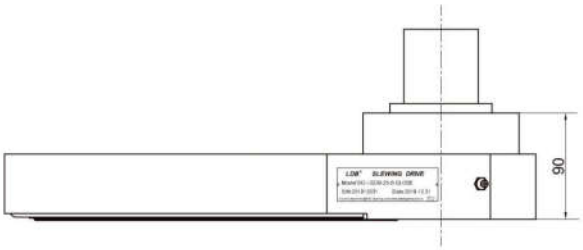

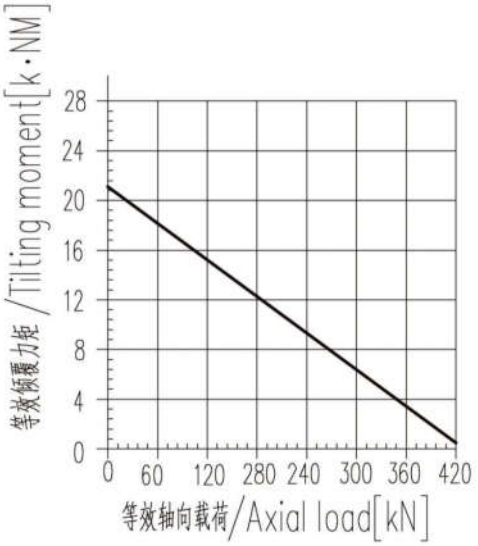

— 滚道曲线/Raceway curve

【SG-I-0311】

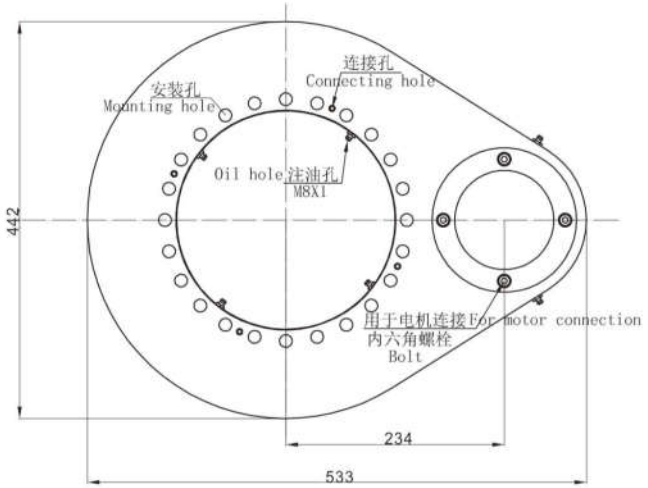

模数/Module	m	[mm]	4
齿圈齿数/Teeth number of wheel	z2	[-]	102
小齿轮齿数/Teeth number of pinion	z1	[-]	15
总传动比/Overall gear ration	i	[-]	6.80
最大扭矩/Max torque SFS=1.75	Md max	[Nm]	3574
标准扭矩/Nom torque SF=1 at n=5rpm	Md nom	[Nm]	2520
最大保持扭矩/Max holding torque	Mh	[Nm]	3574
径向额定静载荷/Radial static load	Co rad	[kN]	198
轴向额定静载荷/Axial static load	Co ax	[kN]	529
径向额定动载荷/Radial dynamic load	C rad	[kN]	163
轴向额定动载荷/Axial dynamic load	C ax	[kN]	190
重量（包括RE-300液压马达的12KG)/Weight		[kg]	52
压力差/Pressure differential	Δ P	[bar]	150
油留量/Oil flow	Q	[l/min]	15
输出转速/Output speed	n	[min-1]	5
最大可达扭矩/Max achievable torque	Md	[Nm]	3574

回转驱动的润滑
Lubrication of slewing drive
内径上有4个M8X1的注油嘴
4 M8X1 grease nipples on the inner ring
壳体两侧边有2个M8X1的注油嘴
2 M8X1 grease nipples on the housing
回转驱动应预先润滑
Slewing drive supplied pre-lubricated

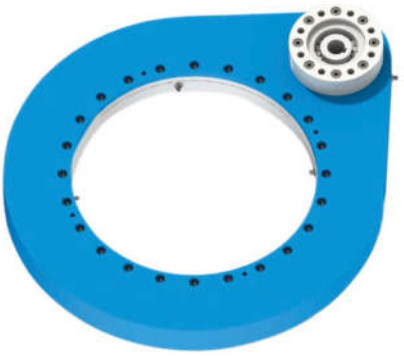

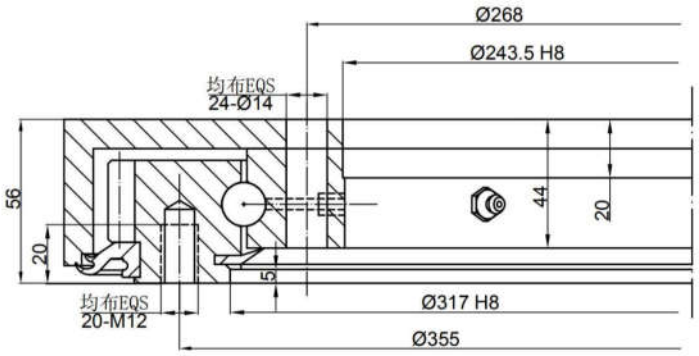

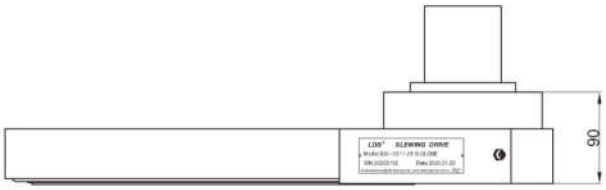

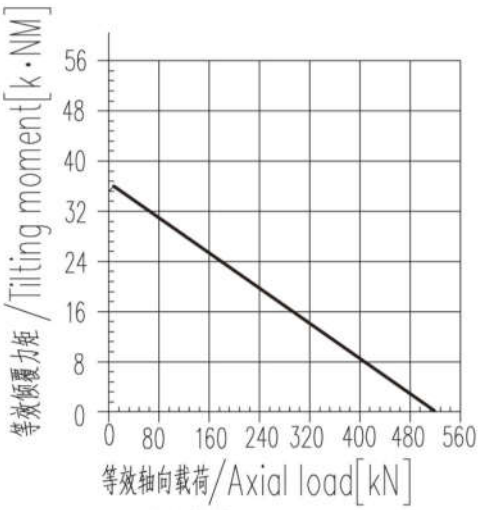

— 滚道曲线/Raceway curve
— 螺栓曲线/Bolt curve R p0.2
螺栓等级/Bolt class 10.9

【SG-I系列】
SG-I Series

【SG-I-0411】

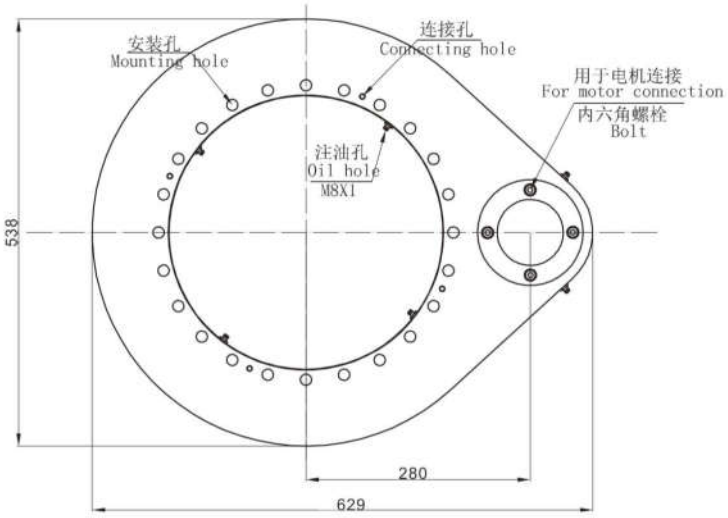

回转驱动的润滑
Lubrication of slewing drive
内径上有4个M8X1的注油嘴
4 M8X1 grease nipples on the inner ring
壳体两侧边有2个M8X1的注油嘴
2 M8X1 grease nipples on the housing
回转驱动应预先润滑
Slewing drive supplied pre-lubricated

模数/Module	m	[mm]	4
齿圈齿数/Teeth number of wheel	z 2	[-]	126
小齿轮齿数/Teeth number of pinion	z 1	[-]	15
总传动比/Overall gear ration	i	[-]	8.40
最大扭矩/Max torque SFS=1.75	$M_{d\ max}$	[Nm]	4476
标准扭矩/Nom torque SF=1 at n=5rpm	$M_{d\ nom}$	[Nm]	3181
最大保持扭矩/Max holding torque	M_h	[Nm]	4476
径向额定静载荷/Radial static load	$C_{o\ rad}$	[kN]	261
轴向额定静载荷/Axial static load	$C_{o\ ax}$	[kN]	699
径向额定动载荷/Radial dynamic load	C_{rad}	[kN]	180
轴向额定动载荷/Axial dynamic load	C_{ax}	[kN]	211
重量（包括RE-300液压马达的12KG)/Weight		[kg]	62
压力差/Pressure differential	Δ P	[bar]	150
油留量/Oil flow	Q	[l/min]	17
输出转速/Output speed	n	[min-1]	5
最大可达扭矩/Max achievable torque	M_d	[Nm]	4476

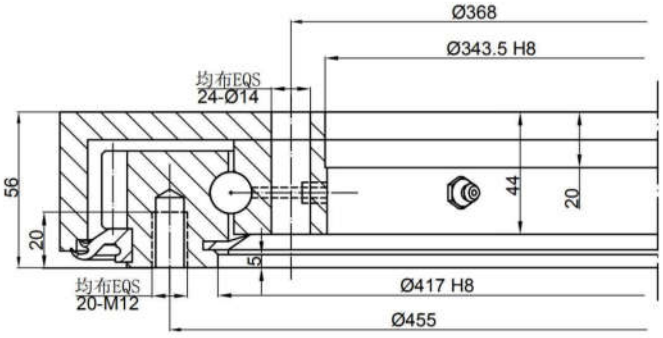

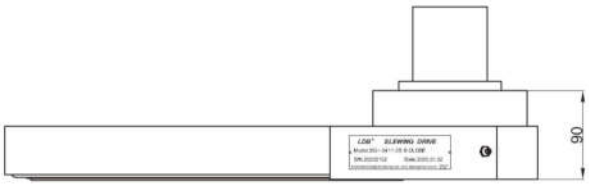

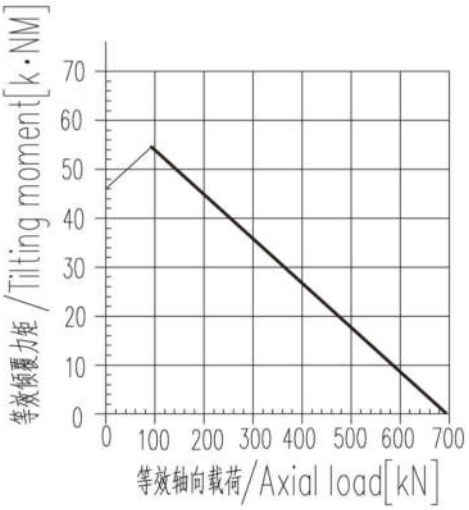

— 滚道曲线/Raceway curve
— 螺栓曲线/Bolt curve R p0.2
螺栓等级/Bolt class 10.9

【SG-I-0541】

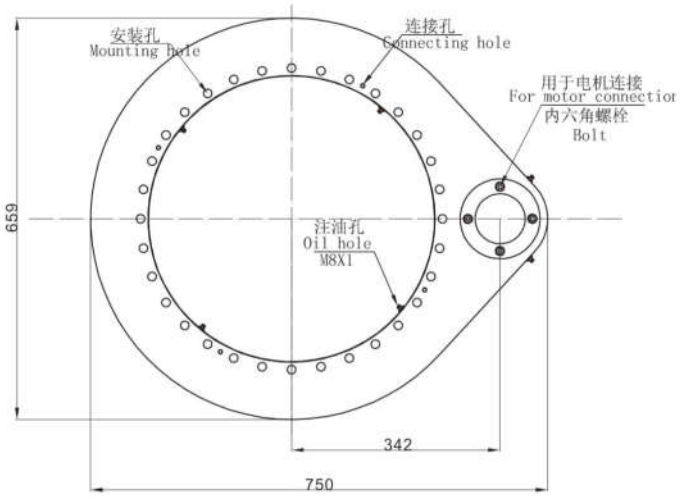

模数/Module	m	[mm]	4
齿圈齿数/Teeth number of wheel	z2	[-]	156
小齿轮齿数/Teeth number of pinion	z1	[-]	15
总传动比/Overall gear ration	i	[-]	10.40
最大扭矩/Max torque SFS=1.75	Md max	[Nm]	5632
标准扭矩/Nom torque SF=1 at n=5rpm	Md nom	[Nm]	4031
最大保持扭矩/Max holding torque	Mh	[Nm]	5632
径向额定静载荷/Radial static load	Co rad	[kN]	344
轴向额定静载荷/Axial static load	Co ax	[kN]	922
径向额定动载荷/Radial dynamic load	C rad	[kN]	201
轴向额定动载荷/Axial dynamic load	C ax	[kN]	236
重量（包括RE-300液压马达的12KG)/Weight		[kg]	75
压力差/Pressure differential	Δ P	[bar]	150
油留量/Oil flow	Q	[l/min]	21
输出转速/Output speed	n	[min-1]	5
最大可达扭矩/Max achievable torque	Md	[Nm]	5632

回转驱动的润滑
Lubrication of slewing drive
内径上有4个M8X1的注油嘴
4 M8X1 grease nipples on the inner ring
壳体两侧边有2个M8X1的注油嘴
2 M8X1 grease nipples on the housing
回转驱动应预先润滑
Slewing drive supplied pre-lubricated

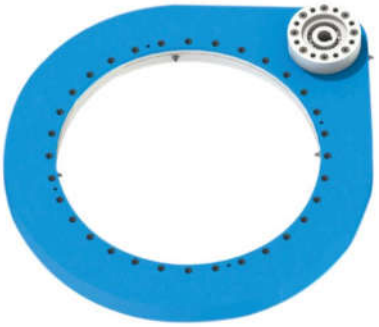

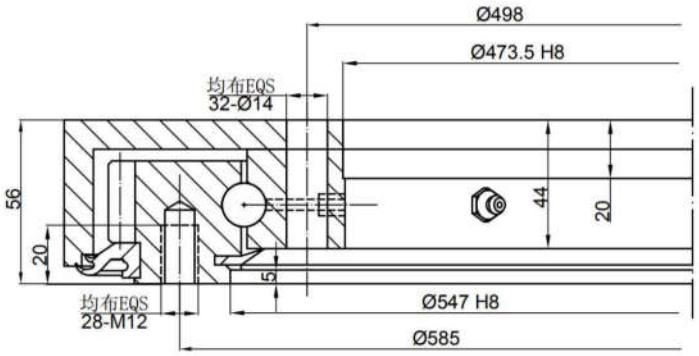

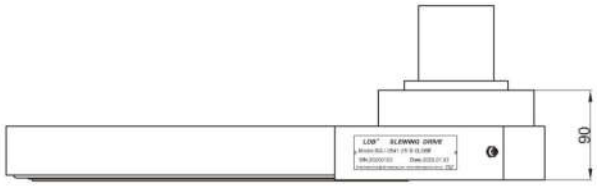

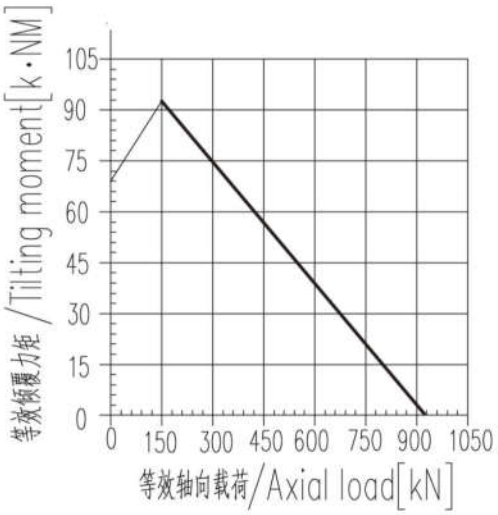

— 滚道曲线/Raceway curve
— 螺栓曲线/Bolt curve R p0.2
螺栓等级/Bolt class 10.9

【SG-I系列】
SG-I Series

【SG-I-0641】

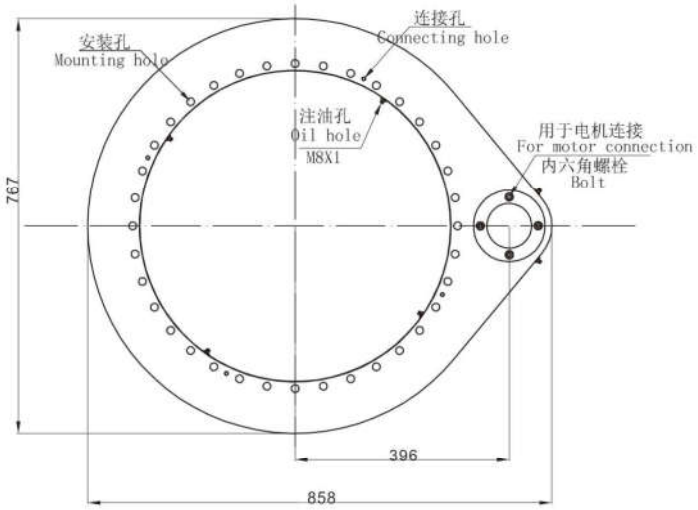

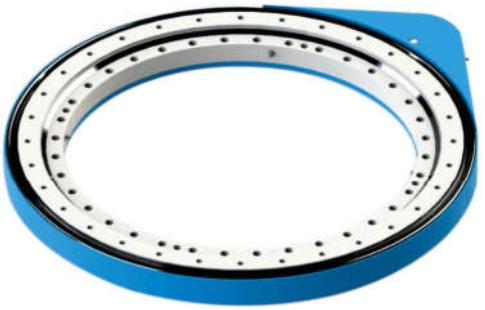

回转驱动的润滑
Lubrication of slewing drive
内径上有4个M8X1的注油嘴
4 M8X1 grease nipples on the inner ring
壳体两侧边有2个M8X1的注油嘴
2 M8X1 grease nipples on the housing
回转驱动应预先润滑
Slewing drive supplied pre-lubricated

模数/Module	m	[mm]	4
齿圈齿数/Teeth number of wheel	z2	[-]	183
小齿轮齿数/Teeth number of pinion	z1	[-]	15
总传动比/Overall gear ration	i	[-]	12.20
最大扭矩/Max torque SFS=1.75	$M_{d\ max}$	[Nm]	6534
标准扭矩/Nom torque SF=1 at n=5rpm	$M_{d\ nom}$	[Nm]	4675
最大保持扭矩/Max holding torque	M_h	[Nm]	6534
径向额定静载荷/Radial static load	$C_{o\ rad}$	[kN]	408
轴向额定静载荷/Axial static load	$C_{o\ ax}$	[kN]	1092
径向额定动载荷/Radial dynamic load	C_{rad}	[kN]	215
轴向额定动载荷/Axial dynamic load	C_{ax}	[kN]	251
重量（包括RE-300液压马达的12KG)/Weight		[kg]	85
压力差/Pressure differential	ΔP	[bar]	155
油留量/Oil flow	Q	[l/min]	23
输出转速/Output speed	n	[min-1]	5
最大可达扭矩/Max achievable torque	M_d	[Nm]	6534

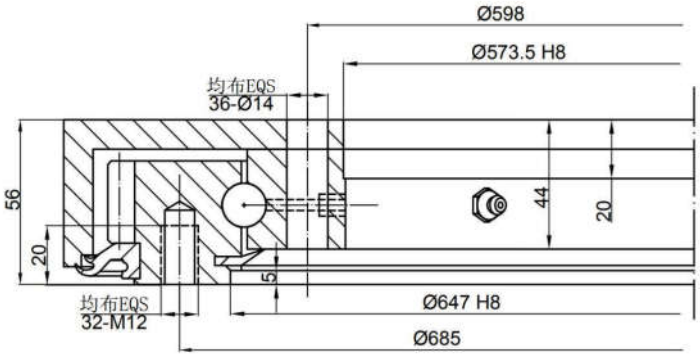

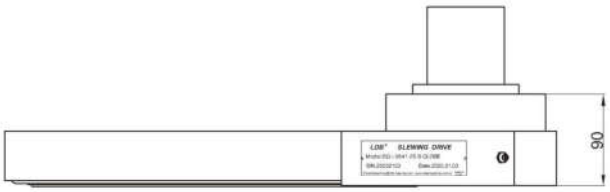

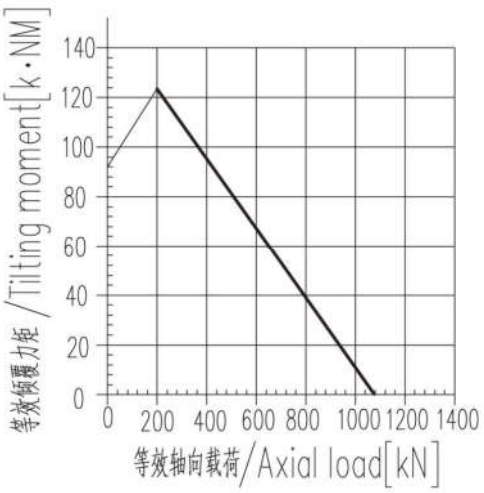

— 滚道曲线/Raceway curve
— 螺栓曲线/Bolt curve R p0.2
螺栓等级/Bolt class 10.9

【SG-I-0741】

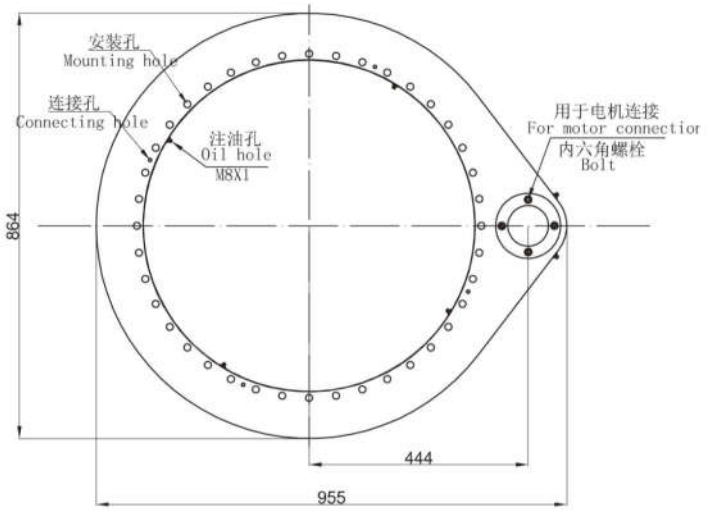

模数/Module	m	[mm]	4
齿圈齿数/Teeth number of wheel	z2	[-]	207
小齿轮齿数/Teeth number of pinion	z1	[-]	15
总传动比/Overall gear ration	i	[-]	13.80
最大扭矩/Max torque SFS=1.75	$M_{d\ max}$	[Nm]	7437
标准扭矩/Nom torque SF=1 at n=5rpm	$M_{d\ nom}$	[Nm]	5362
最大保持扭矩/Max holding torque	M_h	[Nm]	7437
径向额定静载荷/Radial static load	$C_{o\ rad}$	[kN]	471
轴向额定静载荷/Axial static load	$C_{o\ ax}$	[kN]	1262
径向额定动载荷/Radial dynamic load	C_{rad}	[kN]	226
轴向额定动载荷/Axial dynamic load	C_{ax}	[kN]	264
重量（包括RE-300液压马达的12KG)/Weight		[kg]	95
压力差/Pressure differential	ΔP	[bar]	155
油留量/Oil flow	Q	[l/min]	25
输出转速/Output speed	n	[min-1]	5
最大可达扭矩/Max achievable torque	M_d	[Nm]	7437

回转驱动的润滑
Lubrication of slewing drive
内径上有4个M8X1的注油嘴
4 M8X1 grease nipples on the inner ring
壳体两侧边有2个M8X1的注油嘴
2 M8X1 grease nipples on the housing
回转驱动应预先润滑
Slewing drive supplied pre-lubricated

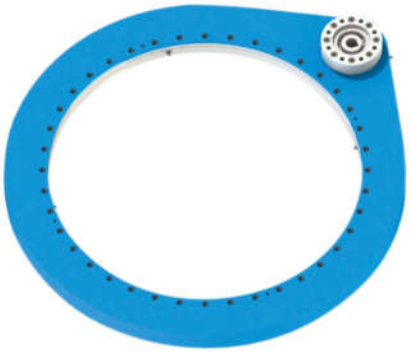

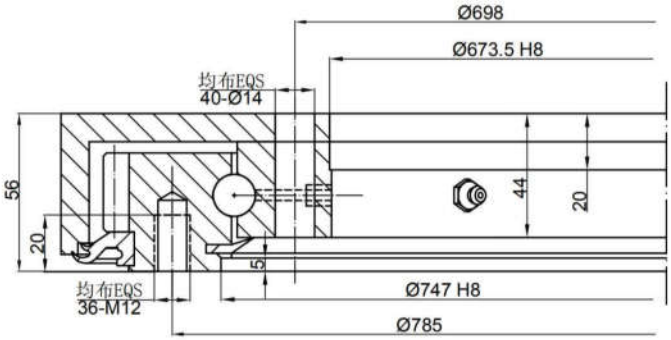

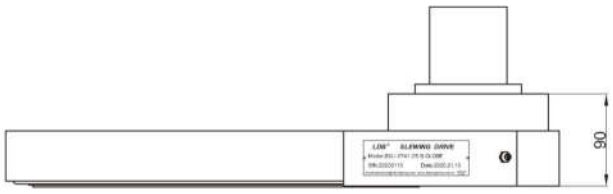

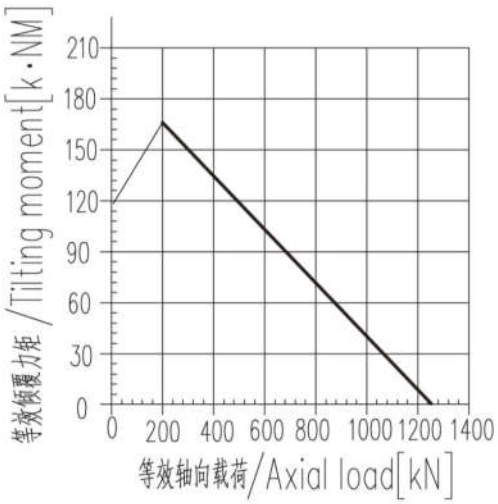

— 滚道曲线/Raceway curve
— 螺栓曲线/Bolt curve R p0.2
螺栓等级/Bolt class 10.9

【SG-I系列】
SG-I Series

【SG-I-0841】

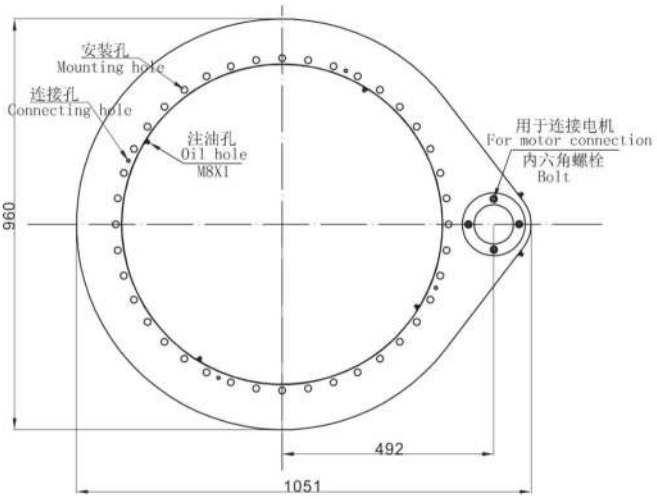

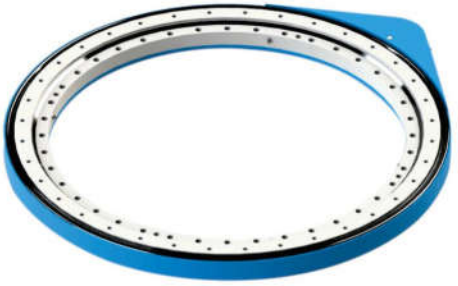

回转驱动的润滑
Lubrication of slewing drive
内径上有4个M8X1的注油嘴
4 M8X1 grease nipples on the inner ring
壳体两侧边有2个M8X1的注油嘴
2 M8X1 grease nipples on the housing
回转驱动应预先润滑/Slewing drive supplied pre-lubricated

模数/Module	m	[mm]	4
齿圈齿数/Teeth number of wheel	z2	[-]	231
小齿轮齿数/Teeth number of pinion	z1	[-]	15
总传动比/Overall gear ration	i	[-]	15.40
最大扭矩/Max torque SFS=1.75	Md max	[Nm]	8339
标准扭矩/Nom torque SF=1 at n=5rpm	Md nom	[Nm]	6012
最大保持扭矩/Max holding torque	Mh	[Nm]	8339
径向额定静载荷/Radial static load	Co rad	[kN]	535
轴向额定静载荷/Axial static load	Co ax	[kN]	1433
径向额定动载荷/Radial dynamic load	C rad	[kN]	237
轴向额定动载荷/Axial dynamic load	C ax	[kN]	278
重量（包括RE-300液压马达的12KG)/Weight		[kg]	106
压力差/Pressure differential	ΔP	[bar]	155
油留量/Oil flow	Q	[l/min]	28
输出转速/Output speed	n	[min-1]	5
最大可达扭矩/Max achievable torque	Md	[Nm]	8339

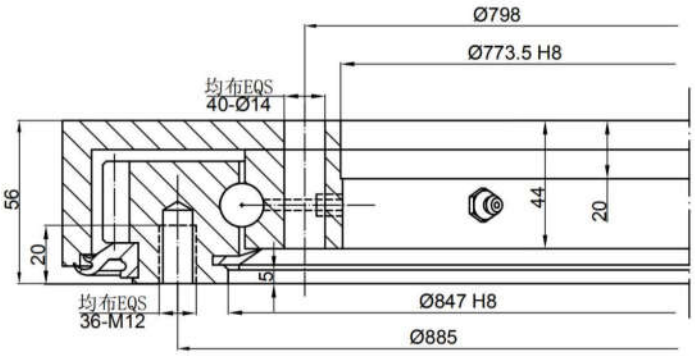

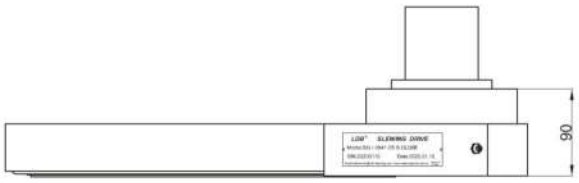

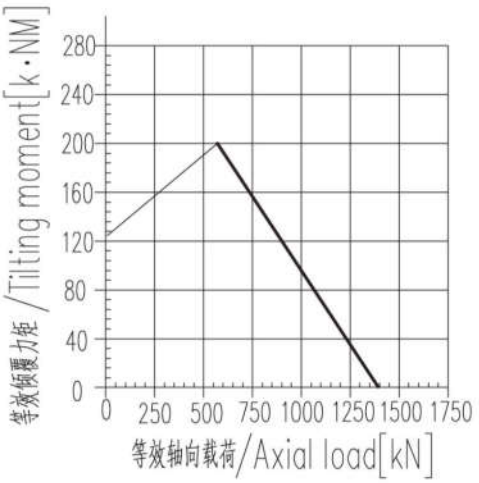

— 滚道曲线/Raceway curve
— 螺栓曲线/Bolt curve R p0.2
螺栓等级/Bolt class 10.9

【SG-I-0941】

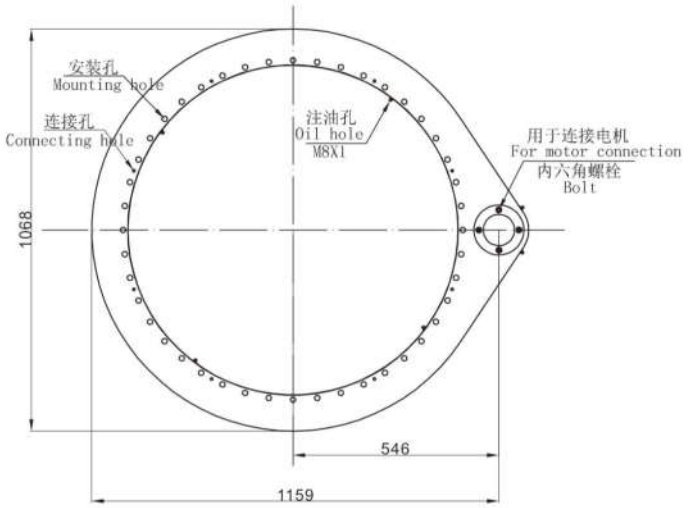

模数/Module	m	[mm]	4
齿圈齿数/Teeth number of wheel	z2	[-]	258
小齿轮齿数/Teeth number of pinion	z1	[-]	15
总传动比/Overall gear ration	i	[-]	17.20
最大扭矩/Max torque SFS=1.75	Md max	[Nm]	9242
标准扭矩/Nom torque SF=1 at n=5rpm	Md nom	[Nm]	6688
最大保持扭矩/Max holding torque	Mh	[Nm]	9242
径向额定静载荷/Radial static load	Co rad	[kN]	599
轴向额定静载荷/Axial static load	Co ax	[kN]	1603
径向额定动载荷/Radial dynamic load	C rad	[kN]	247
轴向额定动载荷/Axial dynamic load	C ax	[kN]	290
重量（包括RE-300液压马达的12KG)/Weight		[kg]	116
压力差/Pressure differential	ΔP	[bar]	155
油留量/Oil flow	Q	[l/min]	30
输出转速/Output speed	n	[min-1]	5
最大可达扭矩/Max achievable torque	Md	[Nm]	9242

回转驱动的润滑
Lubrication of slewing drive
内径上有4个M8X1的注油嘴
4 M8X1 grease nipples on the inner ring
壳体两侧边有2个M8X1的注油嘴
2 M8X1 grease nipples on the housing
回转驱动应预先润滑/Slewing drive supplied pre-lubricated

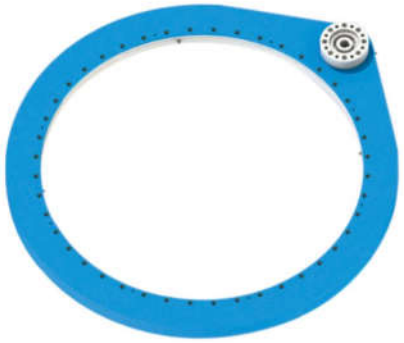

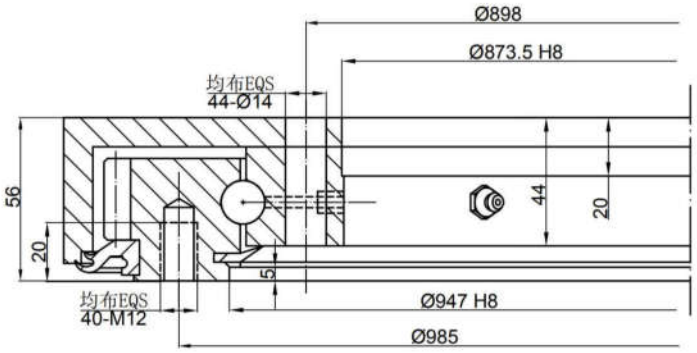

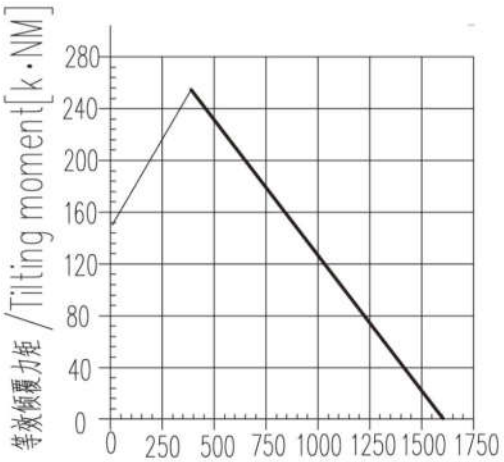

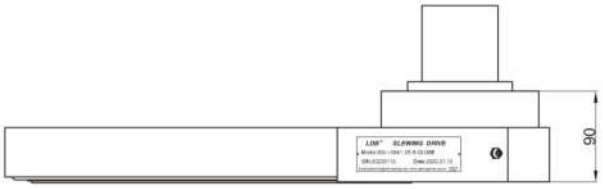

— 滚道曲线/Raceway curve
— 螺栓曲线/Bolt curve R p0.2
螺栓等级/Bolt class 10.9

【SG-I系列】

SG-I Series

【SG-I-1091】

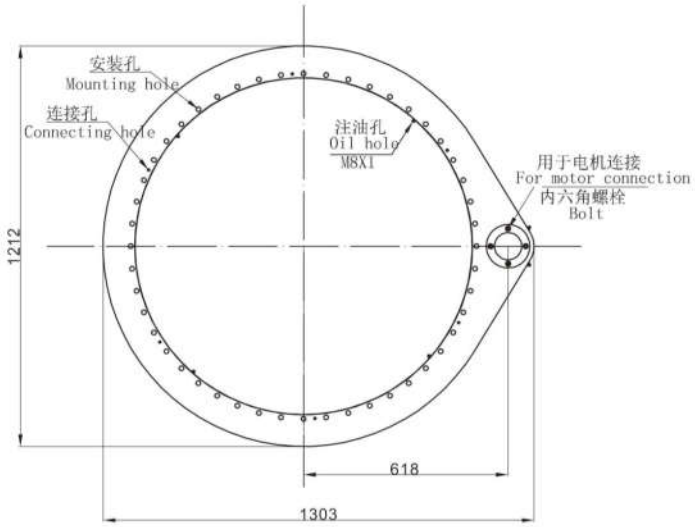

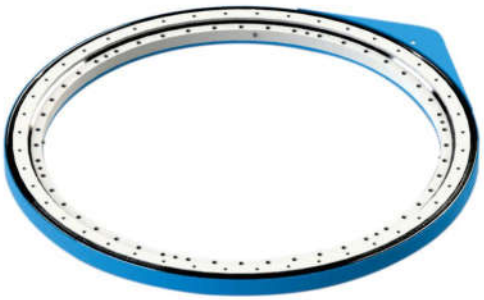

模数/Module	m	[mm]	4
齿圈齿数/Teeth number of wheel	z2	[-]	294
小齿轮齿数/Teeth number of pinion	z1	[-]	15
总传动比/Overall gear ration	i	[-]	19.60
最大扭矩/Max torque SFS=1.75	Md max	[Nm]	10613
标准扭矩/Nom torque SF=1 at n=5rpm	Md nom	[Nm]	7681
最大保持扭矩/Max holding torque	Mh	[Nm]	10613
径向额定静载荷/Radial static load	Co rad	[kN]	695
轴向额定静载荷/Axial static load	Co ax	[kN]	1859
径向额定动载荷/Radial dynamic load	C rad	[kN]	261
轴向额定动载荷/Axial dynamic load	C ax	[kN]	305
重量（包括RE-300液压马达的12KG)/Weight		[kg]	132
压力差/Pressure differential	ΔP	[bar]	150
油留量/Oil flow	Q	[l/min]	35
输出转速/Output speed	n	[min-1]	5
最大可达扭矩/Max achievable torque	Md	[Nm]	10613

回转驱动的润滑
Lubrication of slewing drive
内径上有4个M8X1的注油嘴
4 M8X1 grease nipples on the inner ring
壳体两侧边有2个M8X1的注油嘴
2 M8X1 grease nipples on the housing
回转驱动应预先润滑/Slewing drive supplied pre-lubricated

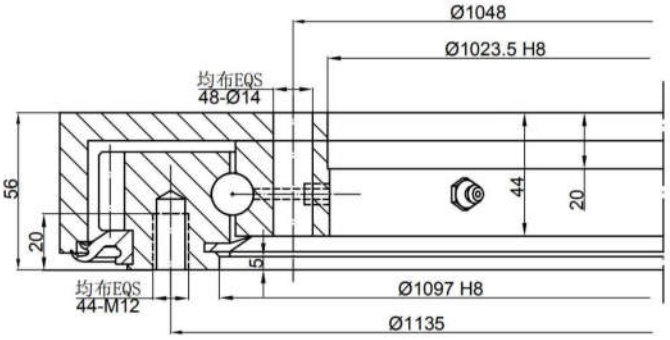

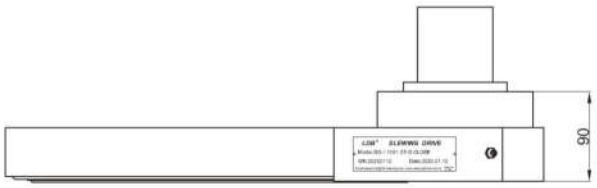

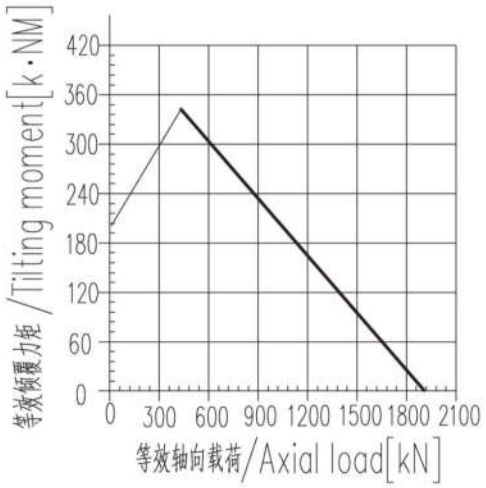

— 滚道曲线/Raceway curve
— 螺栓曲线/Bolt curve R p0.2
螺栓等级/Bolt class 10.9

【SG-M-0311】

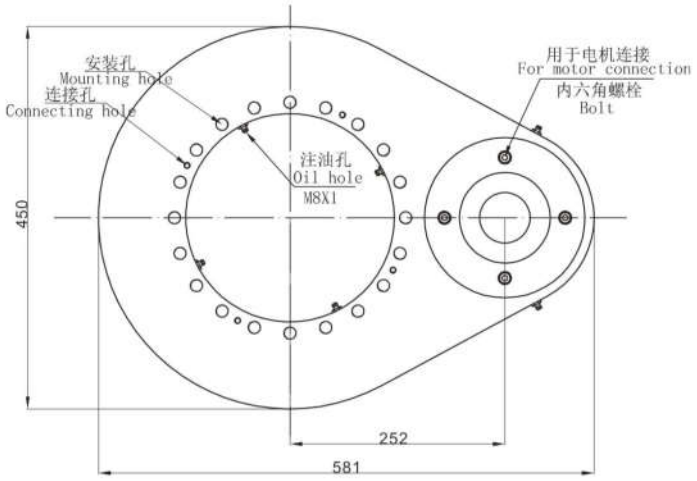

模数/Module	m	[mm]	6
齿圈齿数/Teeth number of wheel	z2	[-]	69
小齿轮齿数/Teeth number of pinion	z1	[-]	15
总传动比/Overall gear ration	i	[-]	4.60
最大扭矩/Max torque	$M_{d\ max}$	[Nm]	8191
标准扭矩/Nom torque SF=1 at n=5rpm	$M_{d\ nom}$	[Nm]	6139
最大保持扭矩/Max holding torque	M_h	[Nm]	8191
径向额定静载荷/Radial static load	$C_{o\ rad}$	[kN]	181
轴向额定静载荷/Axial static load	$C_{o\ ax}$	[kN]	425
径向额定动载荷/Radial dynamic load	C_{rad}	[kN]	133
轴向额定动载荷/Axial dynamic load	C_{ax}	[kN]	133
重量（包括T-306液压马达的8KG)/Weight		[kg]	80
压力差/Pressure differential	ΔP	[bar]	124
油留量/Oil flow	Q	[l/min]	39
输出转速/Output speed	n	[min-1]	5
最大可达扭矩/Max achievable torque	M_d	[Nm]	8191

回转驱动的润滑
Lubrication of slewing drive
内径上有4个M8X1的注油嘴
4 M8X1 grease nipples on the inner ring
壳体两侧边有2个M8X1的注油嘴
2 M8X1 grease nipples on the housing
回转驱动应预先润滑
Slewing drive supplied pre-lubricated

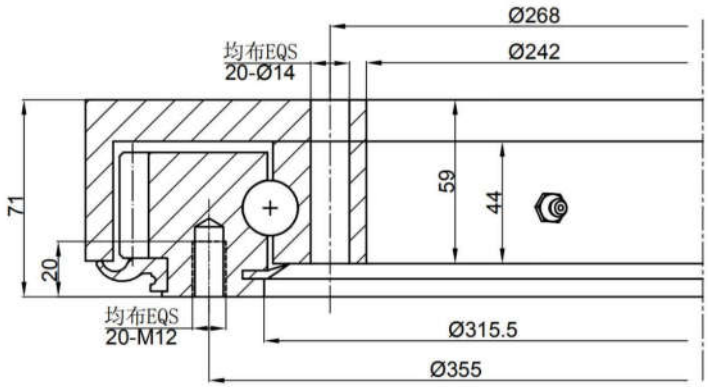

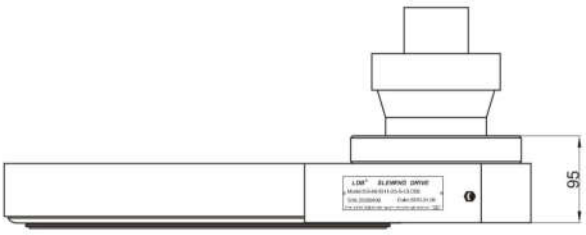

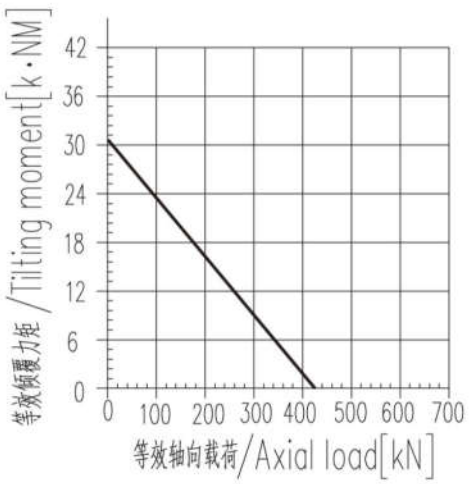

— 滚道曲线/Raceway curve
— 螺栓曲线/Bolt curve R p0.2
螺栓等级/Bolt class 10.9

【SG-M系列】
SG-M Series

【SG-M-0411】

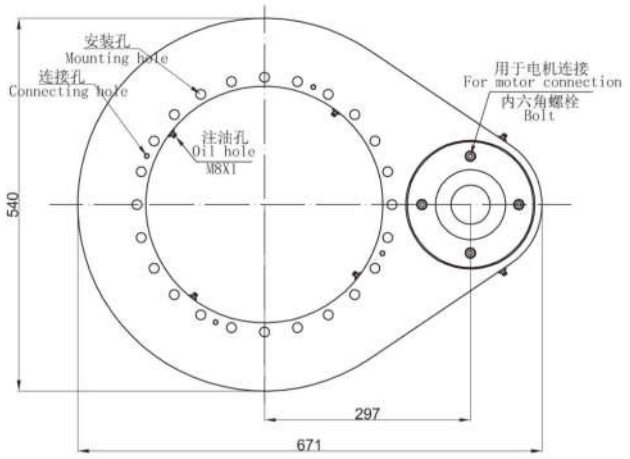

模数/Module	m	[mm]	6
齿圈齿数/Teeth number of wheel	z2	[-]	84
小齿轮齿数/Teeth number of pinion	z1	[-]	15
总传动比/Overall gear ration	i	[-]	5.60
最大扭矩/Max torque	Md max	[Nm]	10147
标准扭矩/Nom torque SF=1 at n=5rpm	Md nom	[Nm]	7687
最大保持扭矩/Max holding torque	Mh	[Nm]	10147
径向额定静载荷/Radial static load	Co rad	[kN]	240
轴向额定静载荷/Axial static load	Co ax	[kN]	561
径向额定动载荷/Radial dynamic load	C rad	[kN]	147
轴向额定动载荷/Axial dynamic load	C ax	[kN]	147
重量（包括2-200液压马达的10KG)/Weight		[kg]	95
压力差/Pressure differential	ΔP	[bar]	190
油留量/Oil flow	Q	[l/min]	28
输出转速/Output speed	n	[min-1]	5
最大可达扭矩/Max achievable torque	Md	[Nm]	10147

回转驱动的润滑
Lubrication of slewing drive
内径上有4个M8X1的注油嘴
4 M8X1 grease nipples on the inner ring
壳体两侧边有2个M8X1的注油嘴
2 M8X1 grease nipples on the housing
回转驱动应预先润滑
Slewing drive supplied pre-lubricated

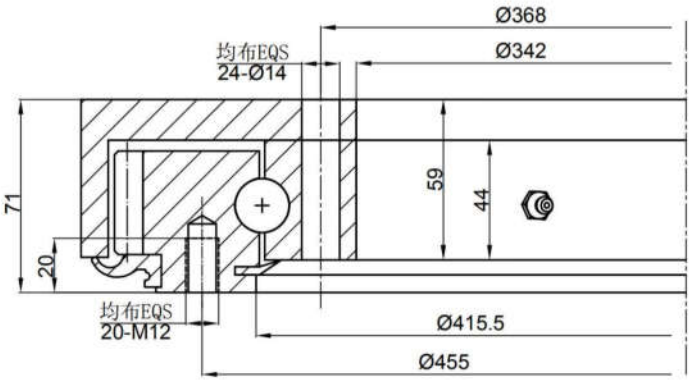

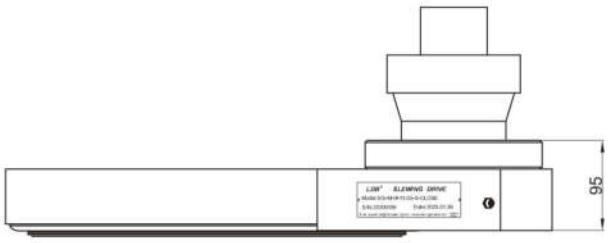

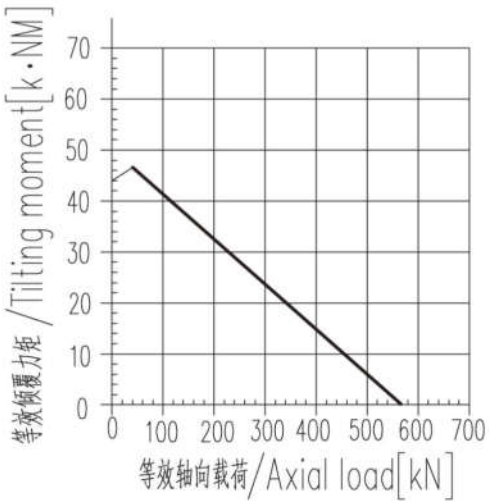

— 滚道曲线/Raceway curve
— 螺栓曲线/Bolt curve R p0.2
螺栓等级/Bolt class 10.9

【SG-M-0541】

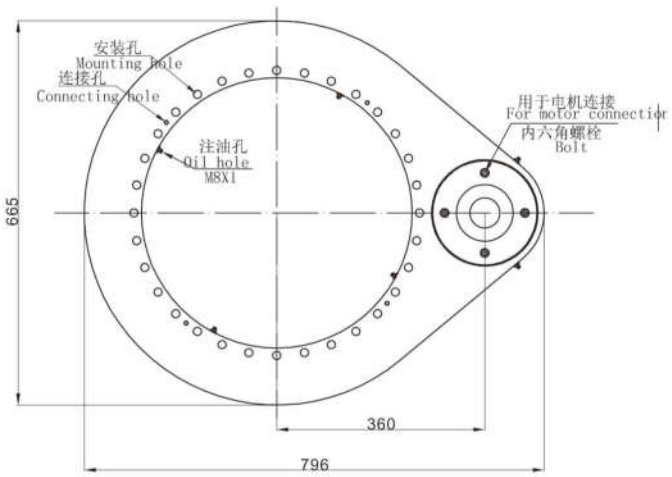

模数/Module	m	[mm]	6
齿圈齿数/Teeth number of wheel	z2	[-]	105
小齿轮齿数/Teeth number of pinion	z1	[-]	15
总传动比/Overall gear ration	i	[-]	7
最大扭矩/Max torque	Md max	[Nm]	12837
标准扭矩/Nom torque SF=1 at n=5rpm	Md nom	[Nm]	9845
最大保持扭矩/Max holding torque	Mh	[Nm]	12837
径向额定静载荷/Radial static load	Co rad	[kN]	316
轴向额定静载荷/Axial static load	Co ax	[kN]	739
径向额定动载荷/Radial dynamic load	C rad	[kN]	164
轴向额定动载荷/Axial dynamic load	C ax	[kN]	165
重量（包括2-200液压马达的10KG)/Weight		[kg]	110
压力差/Pressure differential	ΔP	[bar]	190
油留量/Oil flow	Q	[l/min]	34
输出转速/Output speed	n	[min-1]	5
最大可达扭矩/Max achievable torque	Md	[Nm]	12837

回转驱动的润滑
Lubrication of slewing drive
内径上有4个M8X1的注油嘴
4 M8X1 grease nipples on the inner ring
壳体两侧边有2个M8X1的注油嘴
2 M8X1 grease nipples on the housing
回转驱动应预先润滑
Slewing drive supplied pre-lubricated

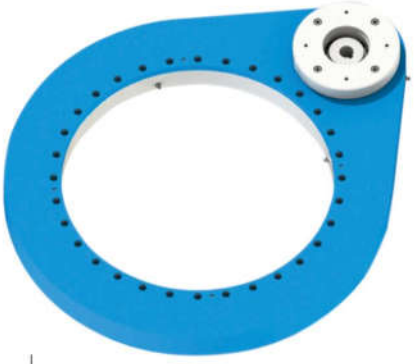

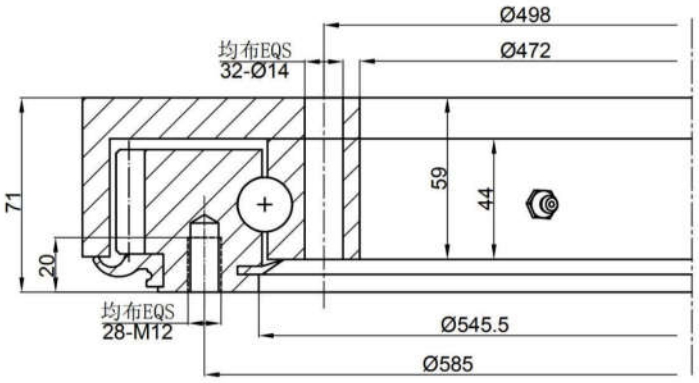

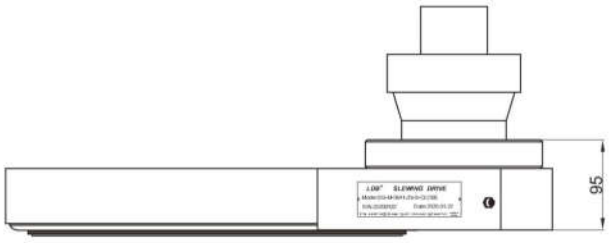

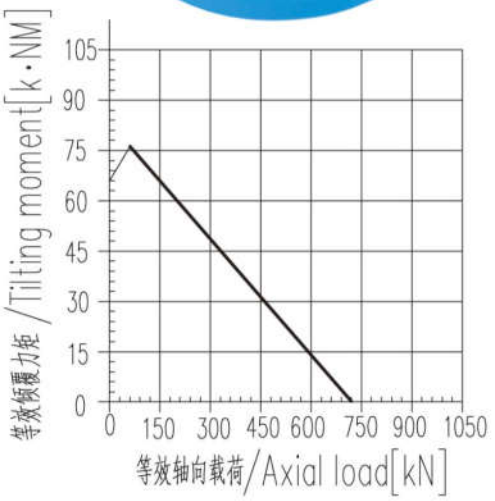

— 滚道曲线/Raceway curve
— 螺栓曲线/Bolt curve R p0.2
螺栓等级/Bolt class 10.9

【SG-M系列】

SG-M Series

【SG-M-0641】

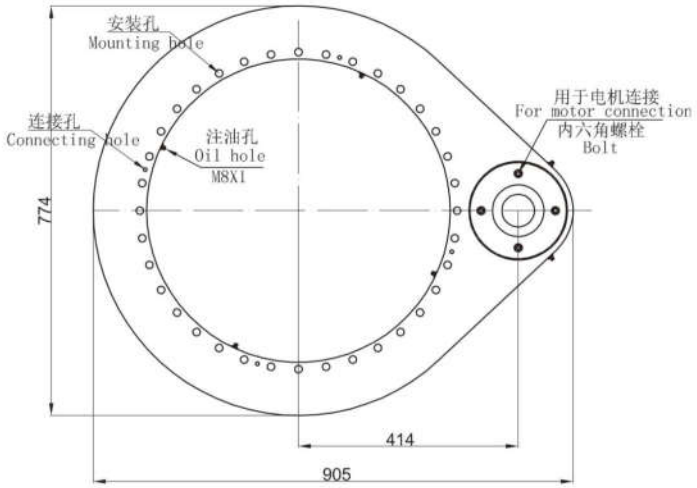

回转驱动的润滑
Lubrication of slewing drive
内径上有4个M8X1的注油嘴
4 M8X1 grease nipples on the inner ring
壳体两侧边有2个M8X1的注油嘴
2 M8X1 grease nipples on the housing
回转驱动应预先润滑
Slewing drive supplied pre-lubricated

模数/Module	m	[mm]	6
齿圈齿数/Teeth number of wheel	z2	[-]	123
小齿轮齿数/Teeth number of pinion	z1	[-]	15
总传动比/Overall gear ration	i	[-]	8.20
最大扭矩/Max torque	$M_{d\ max}$	[Nm]	14916
标准扭矩/Nom torque SF=1 at n=5rpm	$M_{d\ nom}$	[Nm]	11508
最大保持扭矩/Max holding torque	M_h	[Nm]	14916
径向额定静载荷/Radial static load	$C_{o\ rad}$	[kN]	374
轴向额定静载荷/Axial static load	$C_{o\ ax}$	[kN]	876
径向额定动载荷/Radial dynamic load	C_{rad}	[kN]	175
轴向额定动载荷/Axial dynamic load	C_{ax}	[kN]	176
重量（包括2-200液压马达的10KG)/Weight		[kg]	125
压力差/Pressure differential	ΔP	[bar]	190
油留量/Oil flow	Q	[l/min]	38
输出转速/Output speed	n	[min-1]	5
最大可达扭矩/Max achievable torque	M_d	[Nm]	14916

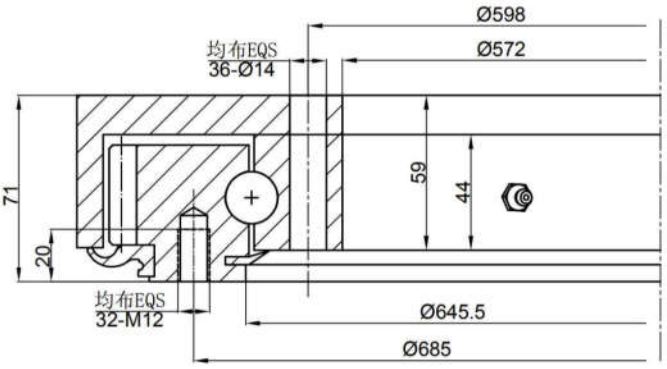

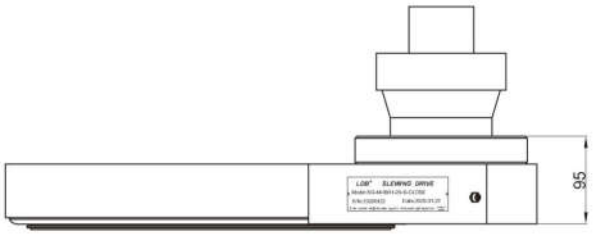

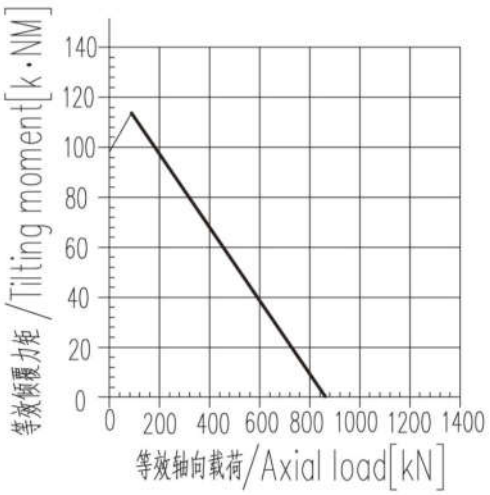

— 滚道曲线/Raceway curve
— 螺栓曲线/Bolt curve R p0.2
螺栓等级/Bolt class 10.9

【SG-M-0741】

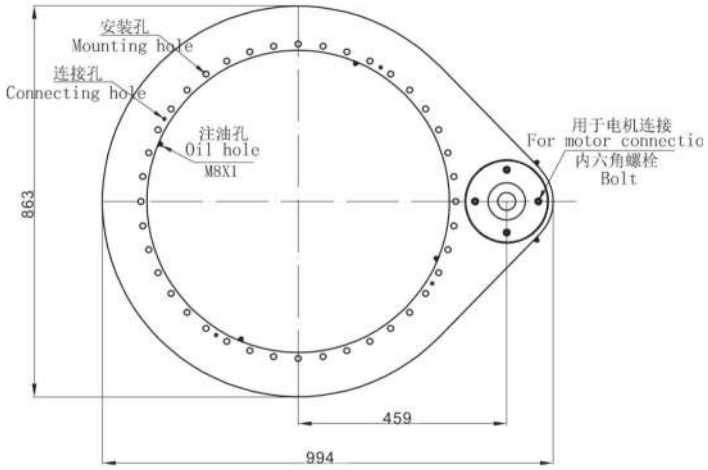

模数/Module	m	[mm]	6
齿圈齿数/Teeth number of wheel	z2	[-]	138
小齿轮齿数/Teeth number of pinion	z1	[-]	15
总传动比/Overall gear ration	i	[-]	9.20
最大扭矩/Max torque	Md max	[Nm]	16872
标准扭矩/Nom torque SF=1 at n=5rpm	Md nom	[Nm]	13057
最大保持扭矩/Max holding torque	Mh	[Nm]	16872
径向额定静载荷/Radial static load	Co rad	[kN]	433.2
轴向额定静载荷/Axial static load	Co ax	[kN]	1013
径向额定动载荷/Radial dynamic load	C rad	[kN]	184
轴向额定动载荷/Axial dynamic load	C ax	[kN]	185
重量（包括2-200液压马达的10KG)/Weight		[kg]	140
压力差/Pressure differential	ΔP	[bar]	190
油留量/Oil flow	Q	[l/min]	43
输出转速/Output speed	n	[min-1]	5
最大可达扭矩/Max achievable torque	Md	[Nm]	16872

回转驱动的润滑
Lubrication of slewing drive
内径上有4个M8X1的注油嘴
4 M8X1 grease nipples on the inner ring
壳体两侧边有2个M8X1的注油嘴
2 M8X1 grease nipples on the housing
回转驱动应预先润滑
Slewing drive supplied pre-lubricated

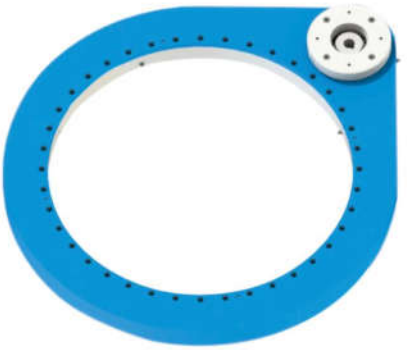

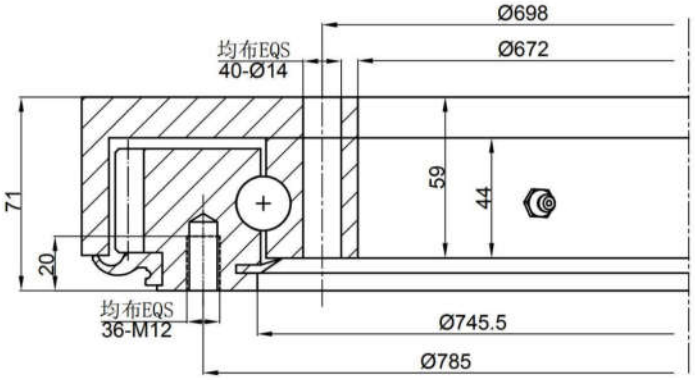

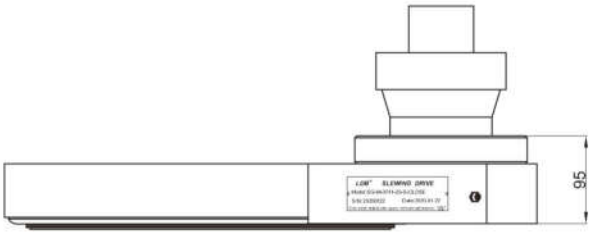

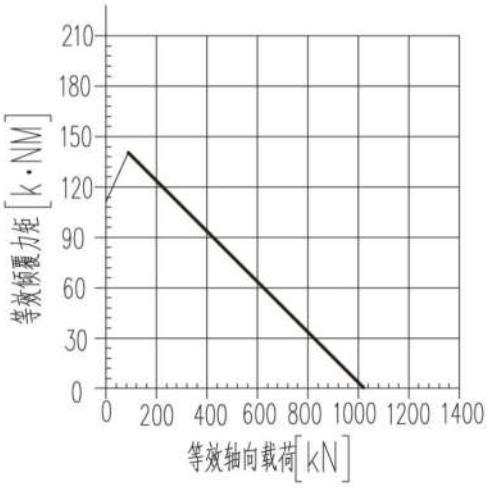

— 滚道曲线/Raceway curve
— 螺栓曲线/Bolt curve R p0.2
螺栓等级/Bolt class 10.9

【SG-M系列】
SG-M Series

【SG-M-0841】

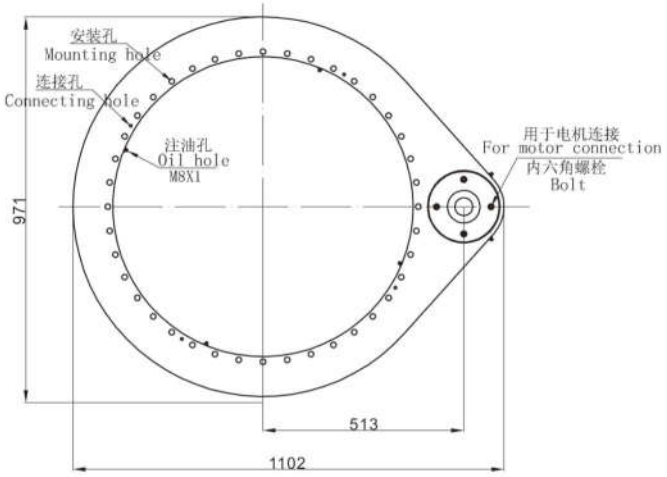

模数/Module	m	[mm]	6
齿圈齿数/Teeth number of wheel	z2	[-]	156
小齿轮齿数/Teeth number of pinion	z1	[-]	15
总传动比/Overall gear ration	i	[-]	10.40
最大扭矩/Max torque	$M_{d\ max}$	[Nm]	19073
标准扭矩/Nom torque SF=1 at n=5rpm	$M_{d\ nom}$	[Nm]	14805
最大保持扭矩/Max holding torque	M_h	[Nm]	19073
径向额定静载荷/Radial static load	$C_{o\ rad}$	[kN]	492
轴向额定静载荷/Axial static load	$C_{o\ ax}$	[kN]	1150
径向额定动载荷/Radial dynamic load	C_{rad}	[kN]	194
轴向额定动载荷/Axial dynamic load	C_{ax}	[kN]	195
重量（包括2-200液压马达的10KG)/Weight		[kg]	155
压力差/Pressure differential	ΔP	[bar]	190
油留量/Oil flow	Q	[l/min]	48
输出转速/Output speed	n	[min-1]	5
最大可达扭矩/Max achievable torque	M_d	[Nm]	19073

回转驱动的润滑
Lubrication of slewing drive
内径上有4个M8X1的注油嘴
4 M8X1 grease nipples on the inner ring
壳体两侧边有2个M8X1的注油嘴
2 M8X1 grease nipples on the housing
回转驱动应预先润滑
Slewing drive supplied pre-lubricated

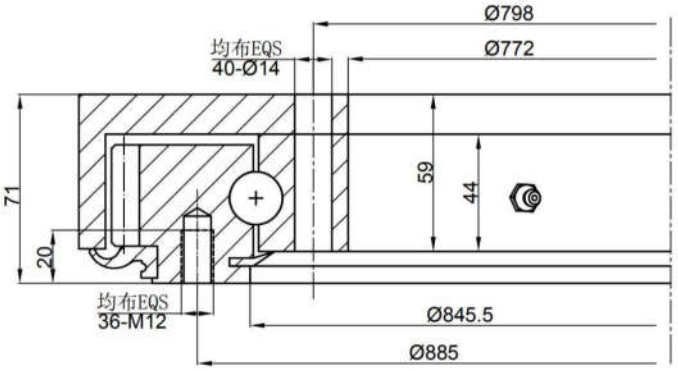

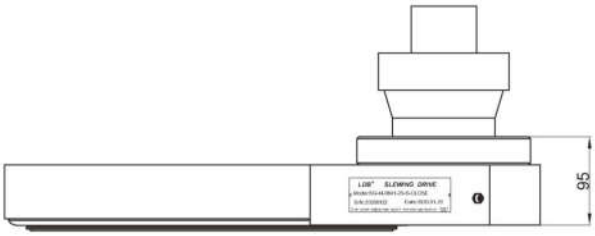

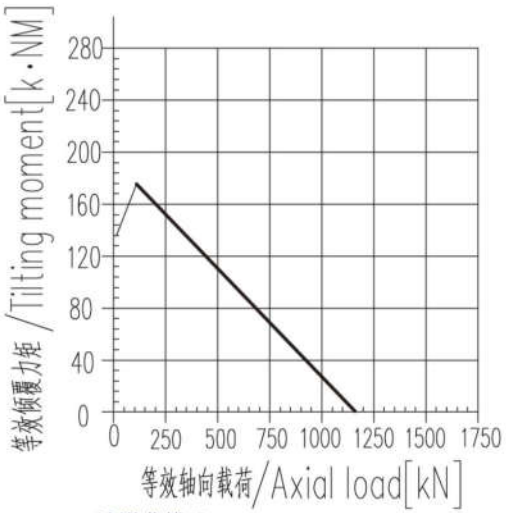

— 滚道曲线/Raceway curve
— 螺栓曲线/Bolt curve R p0.2
螺栓等级/Bolt class 10.9

【SG-M-0941】

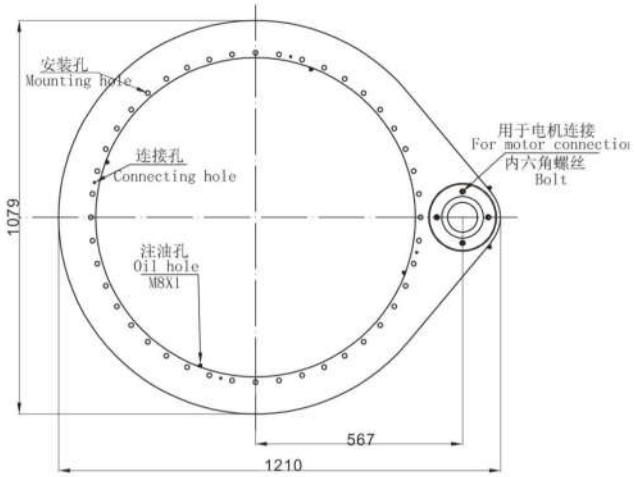

模数/Module	m	[mm]	6
齿圈齿数/Teeth number of wheel	z2	[-]	174
小齿轮齿数/Teeth number of pinion	z1	[-]	15
总传动比/Overall gear ration	i	[-]	11.60
最大扭矩/Max torque	$M_{d\ max}$	[Nm]	21029
标准扭矩/Nom torque SF=1 at n=5rpm	$M_{d\ nom}$	[Nm]	16323
最大保持扭矩/Max holding torque	M_h	[Nm]	21029
径向额定静载荷/Radial static load	$C_{o\ rad}$	[kN]	550
轴向额定静载荷/Axial static load	$C_{o\ ax}$	[kN]	1286
径向额定动载荷/Radial dynamic load	C_{rad}	[kN]	201
轴向额定动载荷/Axial dynamic load	C_{ax}	[kN]	203
重量（包括2-200液压马达的10KG)/Weight		[kg]	170
压力差/Pressure differential	ΔP	[bar]	190
油留量/Oil flow	Q	[l/min]	51
输出转速/Output speed	n	[min-1]	5
最大可达扭矩/Max achievable torque	M_d	[Nm]	21029

回转驱动的润滑
Lubrication of slewing drive
内径上有4个M8X1的注油嘴
4 M8X1 grease nipples on the inner ring
壳体两侧边有2个M8X1的注油嘴
2 M8X1 grease nipples on the housing
回转驱动应预先润滑
Slewing drive supplied pre-lubricated

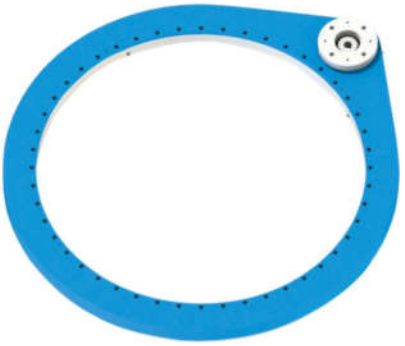

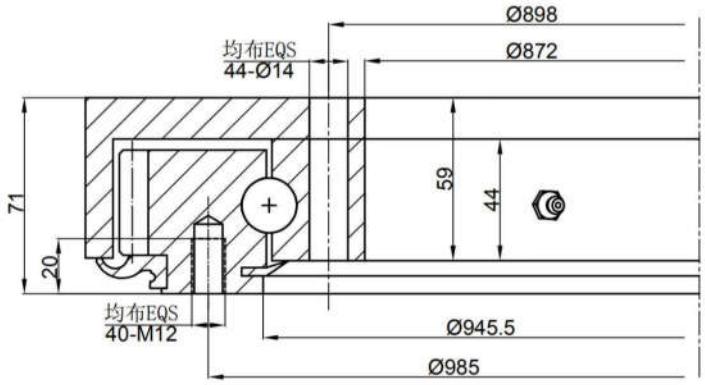

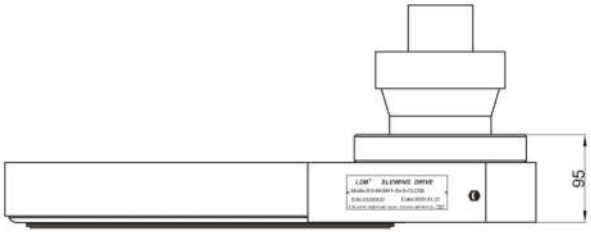

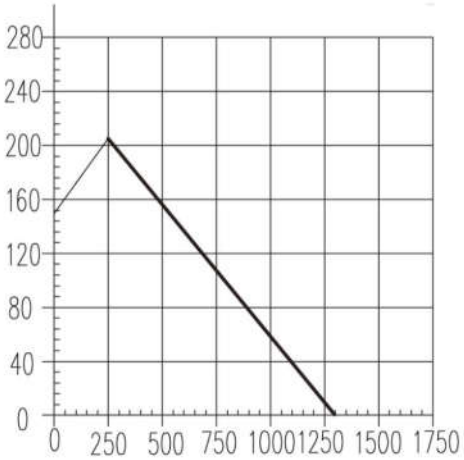

— 滚道曲线/Raceway curve
— 螺栓曲线/Bolt curve R p0.2
螺栓等级/Bolt class 10.9

【SG-M系列】
SG-M Series

【SG-M-1091】

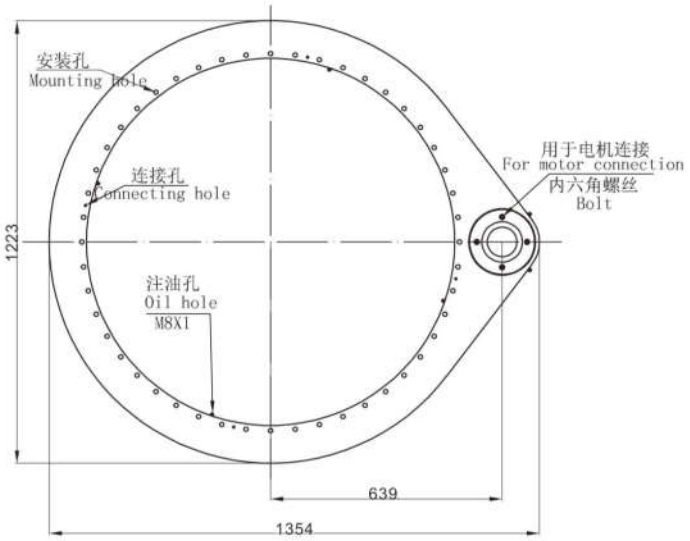

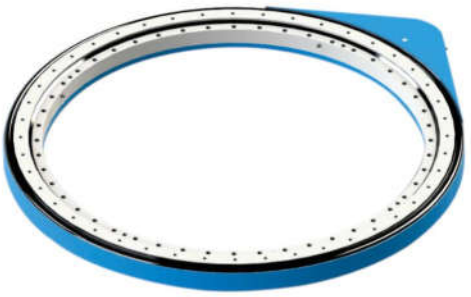

回转驱动的润滑
Lubrication of slewing drive
内径上有4个M8X1的注油嘴
4 M8X1 grease nipples on the inner ring
壳体两侧边有2个M8X1的注油嘴
2 M8X1 grease nipples on the housing
回转驱动应预先润滑
Slewing drive supplied pre-lubricated

模数/Module	m	[mm]	6
齿圈齿数/Teeth number of wheel	z2	[-]	198
小齿轮齿数/Teeth number of pinion	z1	[-]	15
总传动比/Overall gear ration	i	[-]	13.20
最大扭矩/Max torque	$M_{d\ max}$	[Nm]	24207
标准扭矩/Nom torque SF=1 at n=5rpm	$M_{d\ nom}$	[Nm]	18847
最大保持扭矩/Max holding torque	M_h	[Nm]	24207
径向额定静载荷/Radial static load	$C_{o\ rad}$	[kN]	638
轴向额定静载荷/Axial static load	$C_{o\ ax}$	[kN]	1492
径向额定动载荷/Radial dynamic load	C_{rad}	[kN]	213
轴向额定动载荷/Axial dynamic load	C_{ax}	[kN]	215
重量（包括2-200液压马达的10KG)/Weight		[kg]	200
压力差/Pressure differential	ΔP	[bar]	190
油留量/Oil flow	Q	[l/min]	62
输出转速/Output speed	n	[min-1]	5
最大可达扭矩/Max achievable torque	M_d	[Nm]	24207

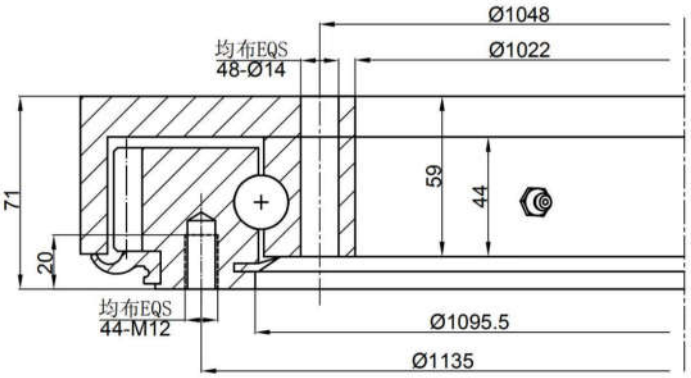

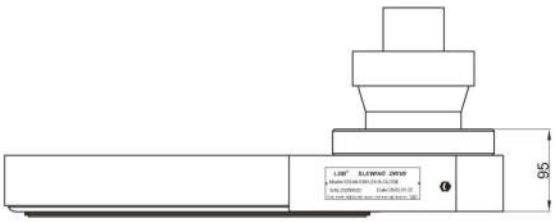

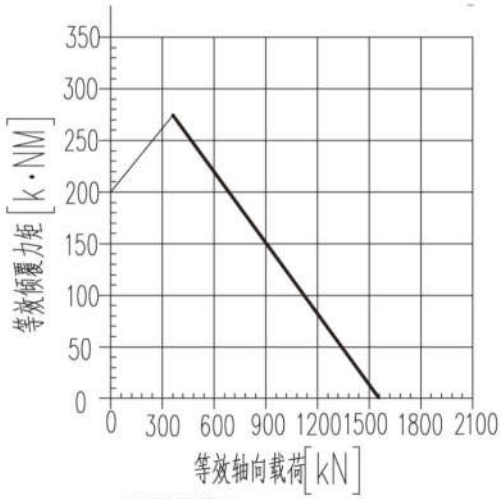

— 滚道曲线/Raceway curve
— 螺栓曲线/Bolt curve R p0.2
螺栓等级/Bolt class 10.9

【SG-H-0455】

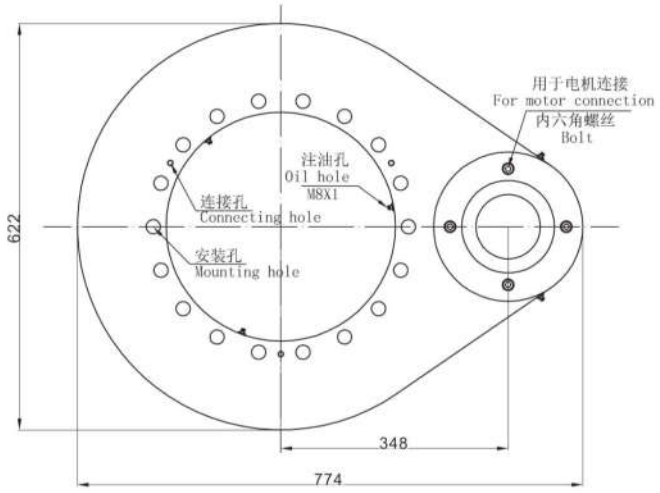

模数/Module	m	[mm]	8
齿圈齿数/Teeth number of wheel	z2	[-]	72
小齿轮齿数/Teeth number of pinion	z1	[-]	15
总传动比/Overall gear ration	i	[-]	4.80
最大扭矩/Max torque	$M_{d\ max}$	[Nm]	26289
标准扭矩/Nom torque SF=1 at n=3rpm	$M_{d\ nom}$	[Nm]	17209
最大保持扭矩/Max holding torque	M_h	[Nm]	26289
径向额定静载荷/Radial static load	$C_{o\ rad}$	[kN]	508
轴向额定静载荷/Axial static load	$C_{o\ ax}$	[kN]	1360
径向额定动载荷/Radial dynamic load	C_{rad}	[kN]	236
轴向额定动载荷/Axial dynamic load	C_{ax}	[kN]	275
重量（包括2-132液压马达的10KG)/Weight		[kg]	190
压力差/Pressure differential	ΔP	[bar]	195
油留量/Oil flow	Q	[l/min]	38
输出转速/Output speed	n	[min-1]	3
最大可达扭矩/Max achievable torque	M_d	[Nm]	26289

回转驱动的润滑
Lubrication of slewing drive
内径上有3个M8X1的注油嘴
3 M8X1 grease nipples on the inner ring
壳体两侧边有2个M8X1的注油嘴
2 M8X1 grease nipples on the housing
回转驱动应预先润滑
Slewing drive supplied pre-lubricated

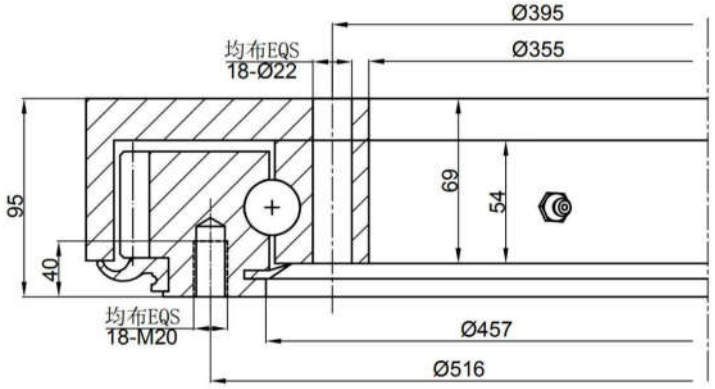

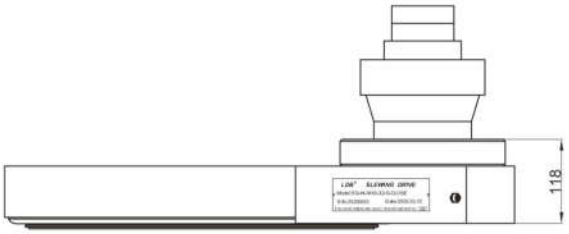

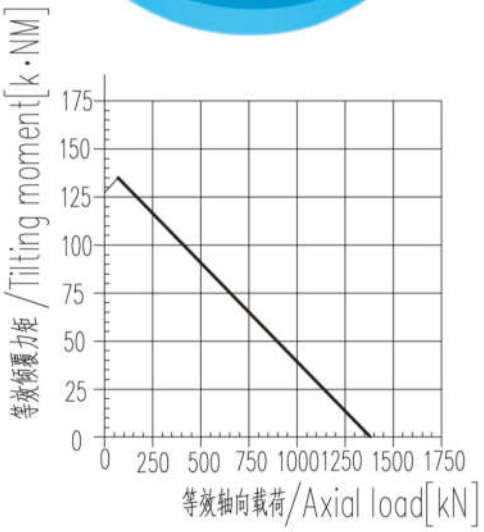

— 滚道曲线/Raceway curve
— 螺栓曲线/Bolt curve R p0.2
螺栓等级/Bolt class 10.9

【SG-H系列】
SG-H Series

【SG-H-0555】

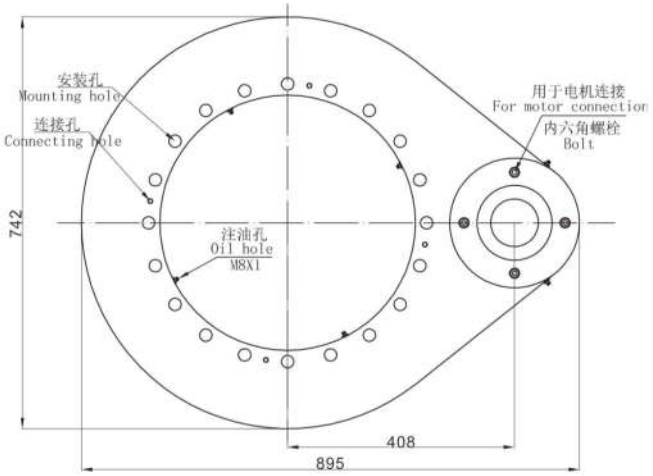

模数/Module	m	[mm]	8
齿圈齿数/Teeth number of wheel	z2	[-]	87
小齿轮齿数/Teeth number of pinion	z1	[-]	15
总传动比/Overall gear ration	i	[-]	5.80
最大扭矩/Max torque	$M_{d\ max}$	[Nm]	31036
标准扭矩/Nom torque SF=1 at n=3rpm	$M_{d\ nom}$	[Nm]	20510
最大保持扭矩/Max holding torque	M_h	[Nm]	31036
径向额定静载荷/Radial static load	$C_{o\ rad}$	[kN]	619
轴向额定静载荷/Axial static load	$C_{o\ ax}$	[kN]	1658
径向额定动载荷/Radial dynamic load	C_{rad}	[kN]	253
轴向额定动载荷/Axial dynamic load	C_{ax}	[kN]	296
重量（包括2-132液压马达的10KG)/Weight		[kg]	215
压力差/Pressure differential	ΔP	[bar]	195
油留量/Oil flow	Q	[l/min]	45
输出转速/Output speed	n	[min-1]	3
最大可达扭矩/Max achievable torque	M_d	[Nm]	31036

回转驱动的润滑
Lubrication of slewing drive
内径上有4个M8X1的注油嘴
4 M8X1 grease nipples on the inner ring
壳体两侧边有2个M8X1的注油嘴
2 M8X1 grease nipples on the housing
回转驱动应预先润滑
Slewing drive supplied pre-lubricated

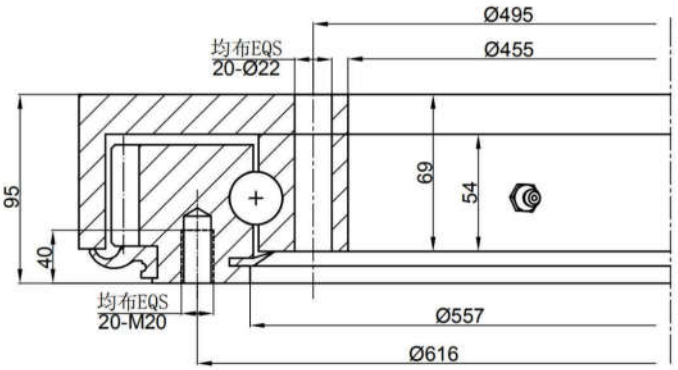

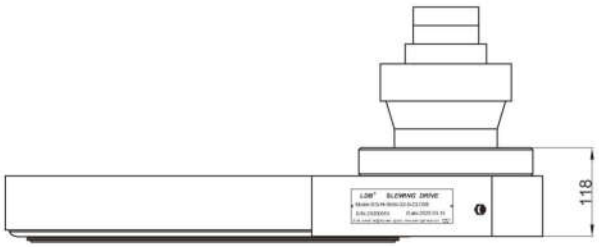

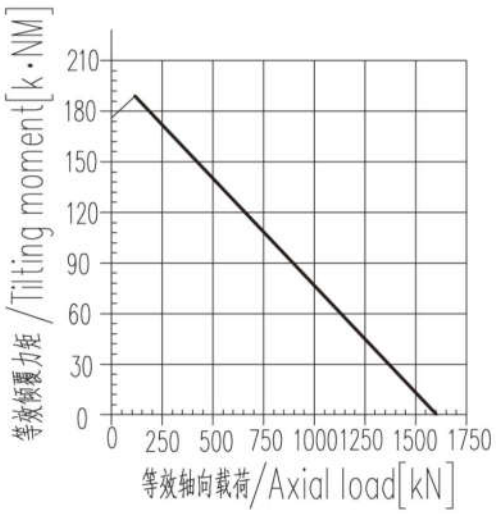

— 滚道曲线/Raceway curve
— 螺栓曲线/Bolt curve R p0.2
螺栓等级/Bolt class 10.9