洛阳隆达轴承有限公司
LUOYANG LONGDA BEARING CO.,LTD
Add : Tuqiaogou Village, Hi-Tech zone, Luoyang,
Henan province, China 471003
Tel: +86-379-64985493
Fax: +86-379-64924823
E-mail: sales@ldb-bearing.com
http: //www.LDB-bearing.com

LDB®

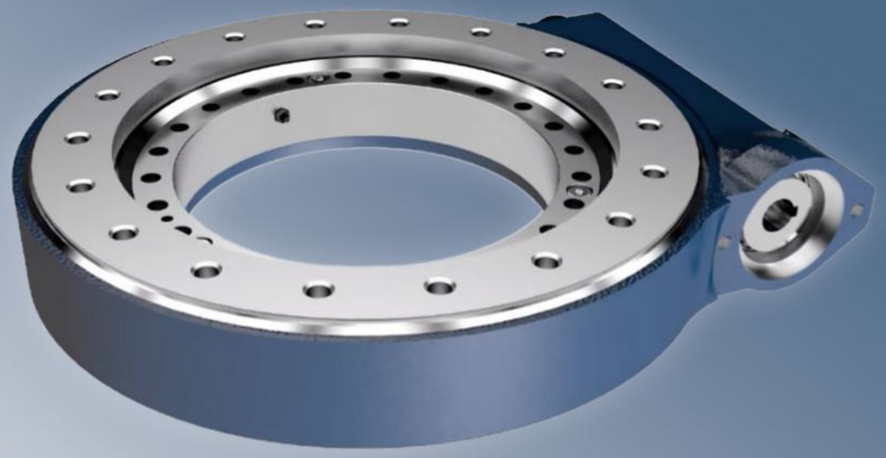

SLEWING DRIVE

回转驱动

洛阳隆达轴承有限公司
LUOYANG LONGDA BEARING CO.,LTD

Company Profile

公司简介

LDB® SLEWING DRIVE

LUOYANG LONGDA BEARING CO.,LTD (LDB company), established in 1999, located in Yiyang bearing industrial park in Luoyang China, Covers area of 30 acreage, We owns more than 100 staffs and have nearly 60 all kinds of bearing manufacturing and testing facilities, LDB company specialized in designing,developing,manufacturing,selling slewing bearings and slewing drive application for engineering machinery and solar equipment.

LDB company manufactures excavator slewing bearings as per JB/T2300-2011 of Machinery Industry Standard and JB/T10839-2008 of Engineering Industry Standard and machine processing diameter range from 150 mm to 3500 mm, Covering all kind of standard and nonstandard design.

LDB slewing bearing' s structures include: Four-point contact ball slewing bearing,Double-row balls slewing bearing, Cross roller slewing bearing, Three-row cylindrical roller and ball-roller combination slewing bearing can match with both domestic and oversea famous excavators.

LDB company has passed the ISO9001:2000 quality system authentication and adopt strict process control from raw material into factory finished product out of factory to ensure 100% qualified rate of outgoing product.

LDB products exported countries include: USA, Canada, Indonesia, Malaysia, Singapore, Germany, Spain, UK, Cezkh, Finland, Holland, Sweden, Ireland, Turkey and UAE etc.

LDB company owns strong technology,advanced processing equipments,complete testing method and perfect after-sales service,We insist on "Elaborate manufacturing,Serve the world" as out motto,supply sincerely high quality product and offer an all-round service, We are willing to cooperate with friends all over the world and build a beautiful and bright future together.

洛阳隆达轴承有限公司成立于1999年，地处中国轴承生产基地—洛阳，是一家专业从事大型、特大型轴承及非标轴承设计、开发、制造、销售、外贸为一体的综合型企业。我公司拥有一批经验丰富的轴承设计研发人员和技工队伍，轴承设计全部采用计算机软件设计，可在短时间里设计出客户所需要的图纸。

我公司主要生产内径在100mm～6000mm的转盘轴承、回转驱动及特种大型精密轴承，加工精度可达P4级。LDB 产品广泛应用于风力发电，太阳能发电，精密数控机床、医疗设备（CT机），石油机械，港口机械（门座，港口起重机），船吊（船用起重机），露天采矿设备（堆取料机）、破碎机、球磨机等大型矿山设备，钢厂轧机设备和钢包回转台，挖掘机和塔吊等工程机械以及军工领域。目前销往的国家有：捷克，英国，西班牙，意大利，挪威，法国，德国，荷兰，泰国，印度，印度尼西亚，美国，加拿大，巴西，以色列，伊朗，土耳其和香港、台湾等国家和地区。

我公司已通过了ISO9001:2000质量体系认证, 并完善了产品加工流程的质量控制。从原材料入厂到成品出厂整个加工过程实施严格的过程控制、检测记录及原材料分析报告，我们所有产品的检验合格率为99%以上。

我们坚持以"精心制造、服务全球"为宗旨，竭诚为用户提供高品质的产品和全方位的服务。衷心希望与您精诚合作，携手共创美好的明天！

Code Description

编号说明

Model Code 型号	Gear 齿轮信息	Worm Shaft 蜗杆信息		Hydraulic Motor 液压马达信息	
SE 14	85	12	E	R	24(E) 001

001 —— Code of speed 转速的代号

24 DC24V Input voltage;" E" means hall installed inside the motor
输入电压；" E" 表示电机带内置编码器

220 AC220V Input voltage 输入电压

R —— Motor position,right side 电机位置在右侧

L —— Motor position,left side 电机位置在左侧

None —— Shaft opposite to motor,capped end 蜗杆非输入端为闷盖

E —— Shaft opposite to motor,with encoder 蜗杆非输入端带编码器

None —— Omitted with motor 配电机时，省略

12 —— 12mm keyed shaft 蜗杆输入孔为ϕ12

16 —— 16mm keyed shaft 蜗杆输入孔为ϕ16

25 —— 25mm keyed shaft 蜗杆输入孔为ϕ25

85 —— Reduction ratio 回转减速机的减速比

14 —— Diameter of raceway in inch 钢球滚道直径近似英寸尺寸

SE —— Enclosed housing slewing drive 围栏型回转减速器

PE —— Precise enclosed housing slewing drive 精密型围栏回转减速器

ZE —— Zero backlash enclosed housing slewing drive 零间隙围栏型回转减速器

VE —— Vertical enclosed housing slewing drive 立式围栏型回转减速器

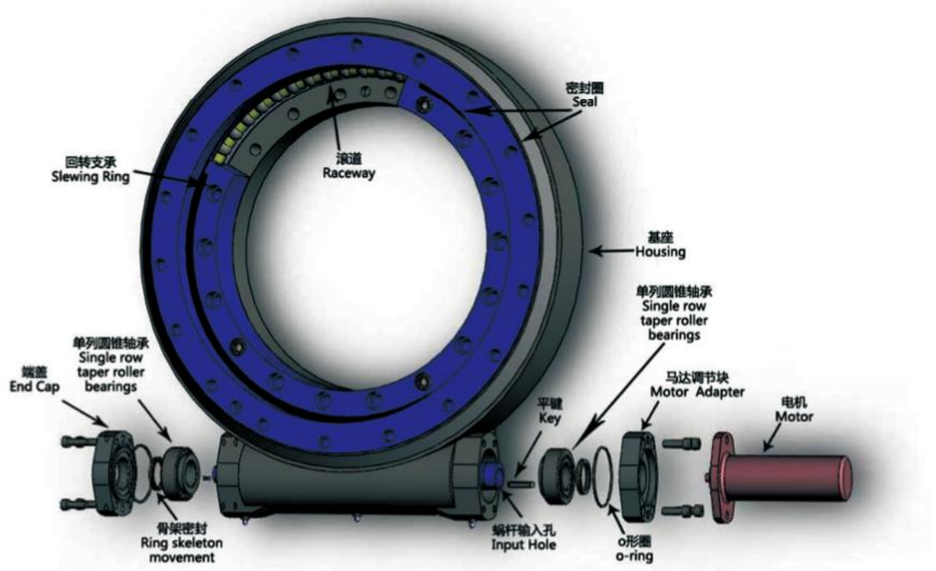

Motors Option

选配电机马达

LDB® SLEWING DRIVE

Motors Option

产品介绍

Product introduction

LDB slewing drive is a deceleration device using the principle of worm gear to achieve a large transmission ratio, and the enveloping worm drive is used to transfer movement and power between two axes staggered in space. The drive of slewing drive is usually composed of worm, slewing bearing, housing and power source.

A slewing bearing is used as the core component, so it can withstand axial load, radial load and tilting moment at the same time. LDB slewing drive compared with the traditional rotary drive products, has the advantages, such as easy installation, easy maintenance, and saving greater space for installation.

Characteristics of main components:

Ⅰ. Slewing bearing can withstand axial load, radial load and tilting moment at the same time. Slewing bearing is generally provided with mounting holes, internal gears or external gears, lubricant holes and sealing device, so the designed host has a compact structure, and is simply guided and is easily maintained.

II. The features of worm gear drive are as follows:

Worm gear drive is used for two axes to intersect at 90 degrees, but when they are not parallel to each other and can not intersect, usually, the worm is active and the worm gear is passive in the worm gear drive.

1. Big transmission ratio, compact structure, small size and light weight.

2. Steady transmission, no noise; low shock and vibration. Because the worm drive is equivalent to screw drive, while a number of teeth mesh.

3. It is line contact between two-wheeled meshing tooth surfaces, and its carrying capacity is much higher than helical gear drive.

4. With self-locking. When the guide angle of worm is less than the equivalent friction angle of between meshing gear teeth, the body has self-locking, and its reverse self-locking can be achieved. Thus, it is widely used in many mechanical devices required for self-locking.

5. It can withstand great radial and axial loads and strong tilting moment.

The device moves with wheels to reduce the consumption of force, and plays a security role. In addition to solar power generation tracking system, it is also usually used for heavy-duty flatbed truck, crane, lorry crane, mobile crane, overhead working truck, ship crane, gantry crane, small wind power station, space communications, satellite receiver and other fields.

回转驱动副是利用蜗轮蜗杆传动的原理实现大传动比的减速装置,采用环面蜗杆传动,用在空间交错的两轴间传递运动和动力。回转驱动副传动通常情况下是由蜗杆、转盘轴承、壳体和动力源组成。

由于核心部件采用转盘轴承，因此可以同时承受轴向载荷、径向载荷和倾翻力矩。LDB回转驱动副与传统的回转类产品相比，具有安装简便、易于维护、更大程度上节省安装空间等优势。

主要部件特点：

一.转盘轴承：同时承受轴向载荷、径向载荷和倾翻力矩。转盘轴承一般都带有安装孔、内齿轮或外齿轮、润滑油孔和密封装置，因而能使主机设计结构紧凑，引导简便，容易维护。

二.蜗轮蜗杆传动的特点如下：

蜗轮蜗杆传动用于两轴相交成90度，但彼此即不能平行又不能相交的情况下，通常在蜗轮蜗杆传动中，蜗杆为主动件而蜗轮为被动件。

1.传动比大，结构紧凑，体积小、重量轻。

2.传动平稳，无噪音；冲击、震动小。因蜗杆传动相当于螺旋传动，同时有多齿啮合。

3.两轮啮合齿面间为线接触，其承载能力大大高于斜齿轮传动。

4.具有自锁性。当蜗杆的导成角小于啮合轮齿间的当量摩擦角时，机构具有自锁性，可实现反向自锁。因此，在许多要求自锁的机械设备中得到广泛的应用。

5.能承受较大的径向、轴向载荷以及较强的倾覆力矩。

此种装置使用轮轴运动可以减少力的消耗，起安全保护作用。除了用在逐日太阳能发电系统通常也用于重型平板运输车、集装箱起重机、随车吊、汽车吊、高空作业车、克令吊、门式起重机、小型风力发电站、航天通讯、卫星接收等领域。

Glossary

专业术语

LDB® SLEWING DRIVE

Tilting Moment Torque:Torque is the load multiplied by the distance between the position of load and the center of slewing ring.If the torque generated by load and distance is greater than the rated tilting moment torque, slewing drive will be overturned.

倾覆力矩：载荷产生的力矩大小等于载荷大小乘载荷作用点到回转支承中心的距离。当载荷产生的力矩大于装置的倾覆力矩时，会产生倾覆失稳。

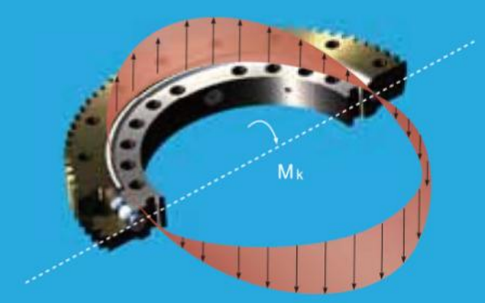

Axial load: Load parallel to the axis of slewing ring.

轴向载荷：作用方向平行于回转支承轴心线的载荷。

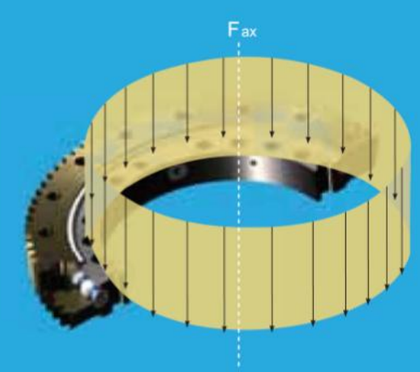

Radial load: Load vertical to the axis of slewing ring.

径向载荷：作用方向垂直于回转支承轴心线的载荷。

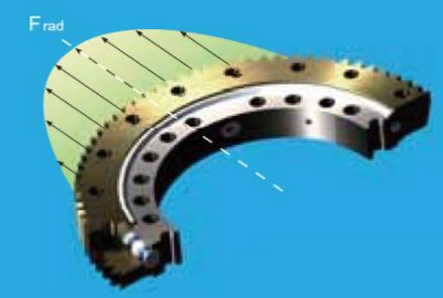

Holding torque: It is the reverse torque.

When the drive is rotating reversely, and parts are not damaged, the maximum torque achieved is called holding torque.

保持力矩：即反向力矩，装置反向旋转，且各个零部件均无损害时的最大反向力矩。

Self-locking: Only when loaded, the slewing drive is not able to reverse rotate and thus called self-locking.

自锁：仅在驱动力或驱动力矩作用下，由于摩擦使机构不能产生运动的现象。

SE3C/PE3C/ZE3C | SLEWING DRIVE 回转驱动

Units (单位): mm
1 inch = 25.4 mm

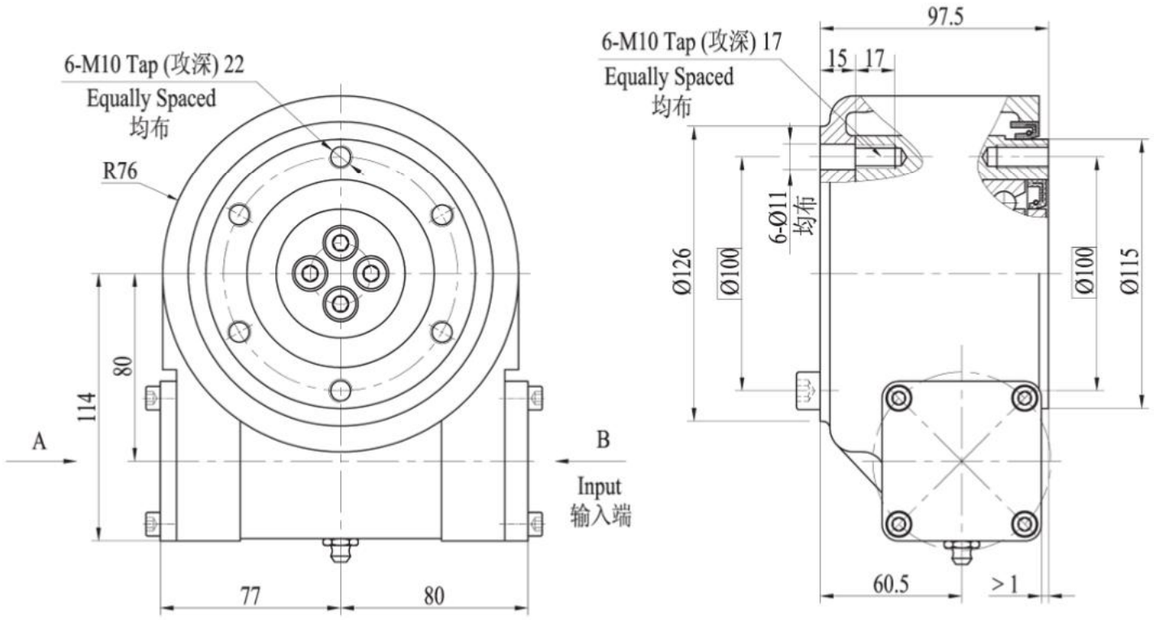

Wt: *12kg*

VIEW A

A 向 视 图

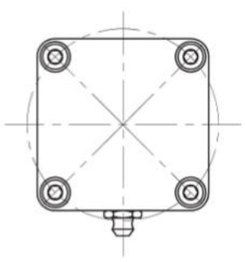

VIEW B

B 向 视 图

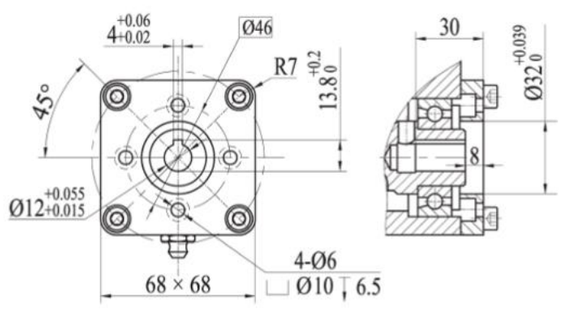

LDB® SLEWING DRIVE

SE3C/PE3C/ZE3C | Slewing Drive Performance Parameters 回转式减速器性能参数表

Model 型号 \ Data 参数	Out Torque 输出转矩	Tilting Moment Torque 倾覆力矩	Holding Torque 保持力矩	Static Axial Rating 轴向静载荷	Static Radial Rating 径向静载荷	Dynamic Axial Rating 轴向动载荷	Dynamic Radial Rating 轴向动载荷	Gear Ratio 减速比	Tracking Precision 精度等级	Weight 重量
SE3C	400 N.m	1100 N.m	2000 N.m	30 kN	16.6 kN	9.6 kN	8.4 kN	62 :1	≤ 0.2°	12kg
	295 lbfft	811 lbfft	1475 lbfft	6744 lbf	3732 lbf	2158 lbf	1888 lbf			
PE3C	400 N.m	1100 N.m	2000 N.m	30 kN	16.6 kN	9.6 kN	8.4 kN	62 :1	I :≤ 0.08° II :≤ 0.12° III:≤ 0.15°	12kg
	295 lbfft	811 lbfft	1475 lbfft	6744 lbf	3732 lbf	2158 lbf	1888 lbf			
ZE3C	240 N.m	1100 N.m	2000 N.m	30 kN	16.6 kN	9.6 kN	8.4 kN	62 :1	0°	12kg
	177 lbfft	811 lbfft	1475 lbfft	6744 lbf	3732 lbf	2158 lbf	1888 lbf			

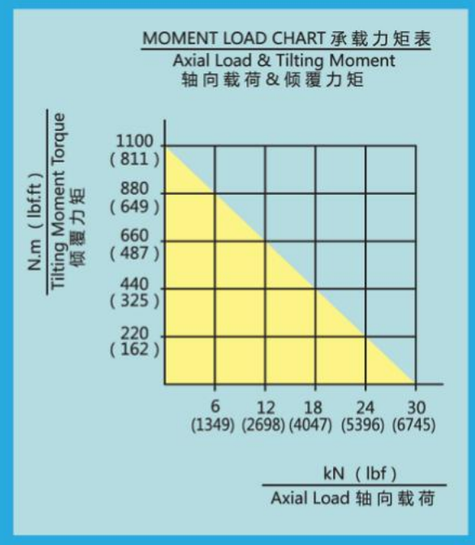

NOTICE 注意

▲ PLEASE BE SURE TO REMAIN UNDER THIS CURVE
选型时请确保实际载荷在曲线范围内

▲ This drawing is just for your reference
以上图纸仅供参考

▲ The drawing is subject to change due to new design without prior notice
本公司保留改进产品的权利而不再另行通知

SE5A/PE5A/ZE5A | SLEWING DRIVE 回转驱动

Units（单位）: mm
1 inch = 25.4 mm

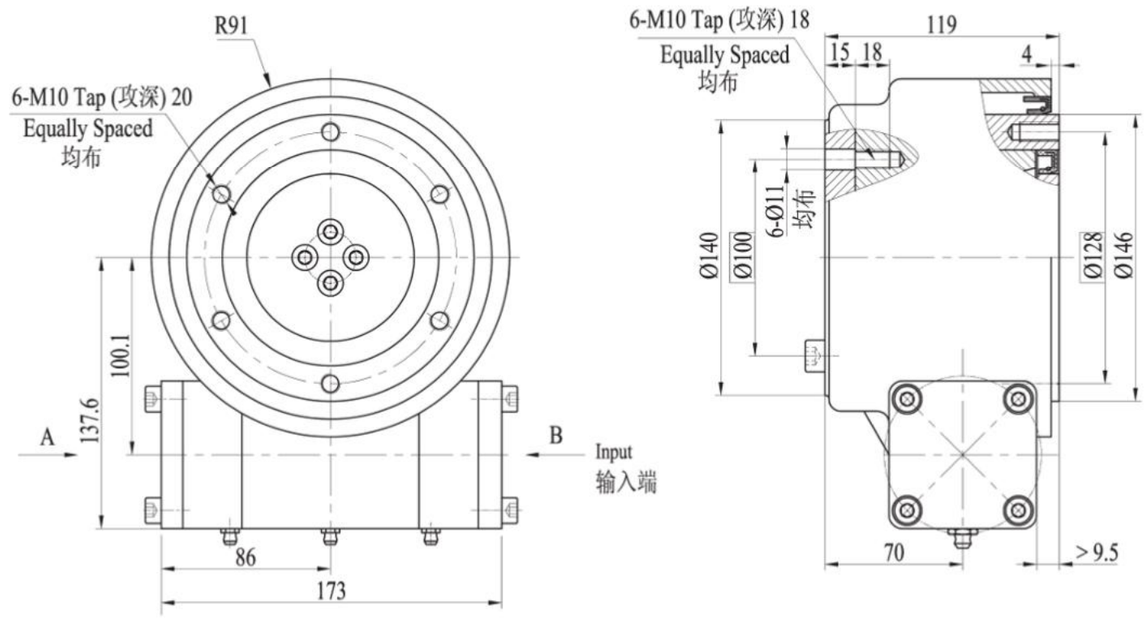

Wt:20kg

VIEW A

A 向视图

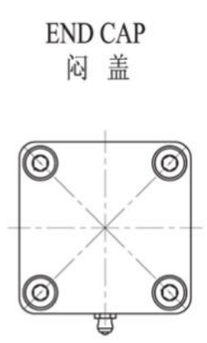

END CAP
闷 盖

VIEW B

B 向视图

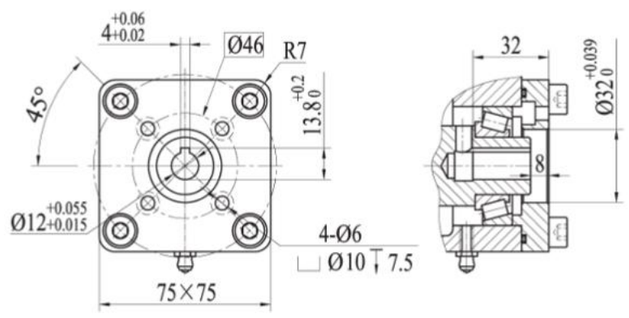

LDB® SLEWING DRIVE

SE5A/PE5A/ZE5A | Slewing Drive Performance Parameters 回转式减速器性能参数表

Model 型号 \ Data 参数	Out Torque 输出转矩	Tilting Moment Torque 倾覆力矩	Holding Torque 保持力矩	Static Axial Rating 轴向静载荷	Static Radial Rating 径向静载荷	Dynamic Axial Rating 轴向动载荷	Dynamic Radial Rating 轴向动载荷	Gear Ratio 减速比	Tracking Precision 精度等级	Weight 重量
SE5A	600 N.m	3000 N.m	5500 N.m	45 kN	22 kN	14.4 kN	11.1 kN	62 : 1	≤ 0.2°	20kg
	442.5 lbfft	2212.5 lbfft	4056.25 lbfft	10116 lbf	4945.6 lbf	3237.1 lbf	2495.3 lbf			
PE5A	600 N.m	3000 N.m	5500 N.m	45 kN	22 kN	14.4 kN	11.1 kN	62 : 1	I :≤ 0.05° II :≤ 0.08° III:≤ 0.12°	20kg
	442.5 lbfft	2212.5 lbfft	4056.25 lbfft	10116 lbf	4945.6 lbf	3237.1 lbf	2495.3 lbf			
ZE5A	360 N.m	3000 N.m	5500 N.m	45 kN	22 kN	14.4 kN	11.1 kN	62 : 1	0°	20kg
	265.5 lbfft	2212.5 lbfft	4056.25 lbfft	10116 lbf	4945.6 lbf	3237.1 lbf	2495.3 lbf			

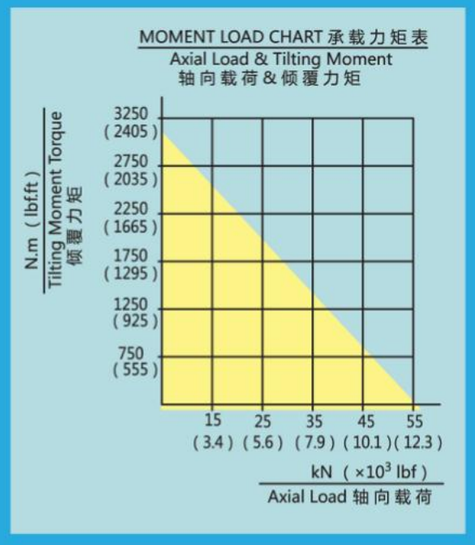

NOTICE 注意

▲ PLEASE BE SURE TO REMAIN UNDER THIS CURVE
选型时请确保实际载荷在曲线范围内

▲ This drawing is just for your reference
以上图纸仅供参考

▲ The drawing is subject to change due to new design without prior notice
本公司保留改进产品的权利而不再另行通知

SE7/PE7/ZE7 | SLEWING DRIVE 回转驱动

Units (单位): mm
1 inch = 25.4 mm

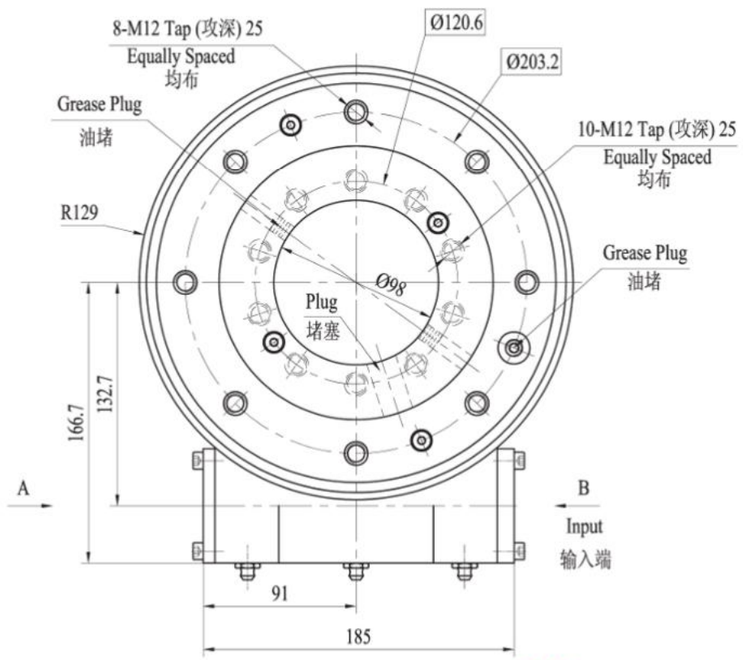

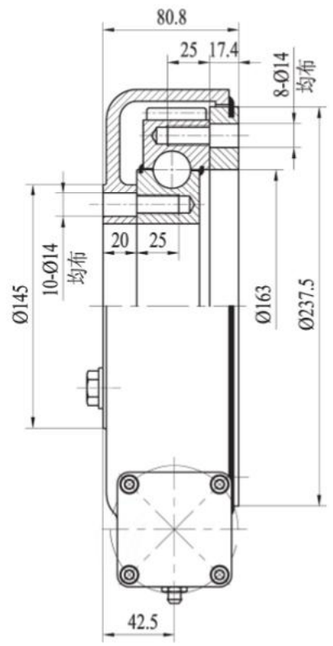

Wt:21kg

VIEW A OPTION

A 向选项

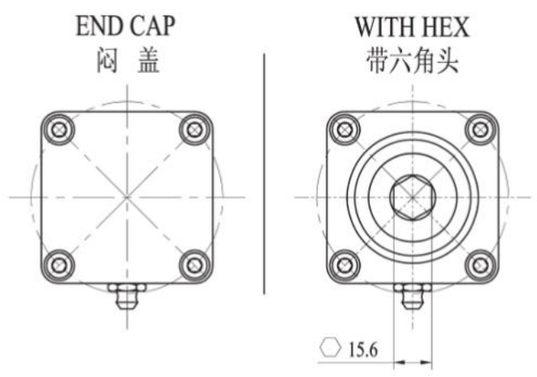

VIEW B

B 向视图

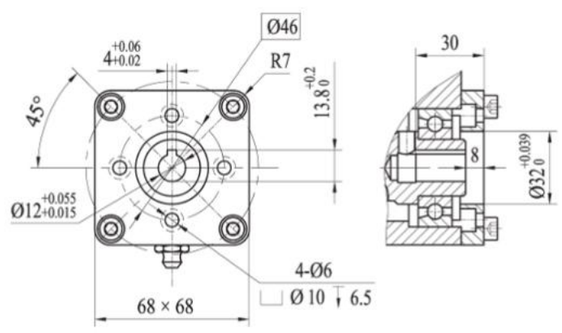

LDB® SLEWING DRIVE

SE7/PE7/ZE7 | Slewing Drive Performance Parameters 回转式减速器性能参数表

Model 类型 \ Data 参数	Output Torque 输出转矩	Tilting Moment Torque 倾覆力矩	Holding Torque 保持力矩	Static Axial Rating 轴向静载荷	Static Radial Rating 径向静载荷	Dynamic Axial Rating 轴向动载荷	Dynamic Radial Rating 径向动载荷	Gear Ratio 减速比	Tracking Precision 精度等级	Weight 重量
SE7	1500 N.m	13500 N.m	10400 N.m	133 kN	53 kN	32 kN	28 kN	73 :1	≤ 0.2°	21kg
	1107 bfft	9957 bfft	7671 bfft	29900 bf	11915 bf	7194 bf	6295 bf			
PE7	1500 N.m	13500 N.m	10400 N.m	133 kN	53 kN	32 kN	28 kN	73 :1	I :≤ 0.05° II :≤ 0.07° III:≤ 0.11°	21kg
	1107 bfft	9957 bfft	7671 bfft	29900 bf	11915 bf	7194 bf	6295 bf			
ZE7	600 N.m	13500 N.m	10400 N.m	133 kN	53 kN	32 kN	28 kN	73 :1	0°	21kg
	443 bfft	9957 bfft	7671 bfft	29900 bf	11915 bf	7194 bf	6295 bf			

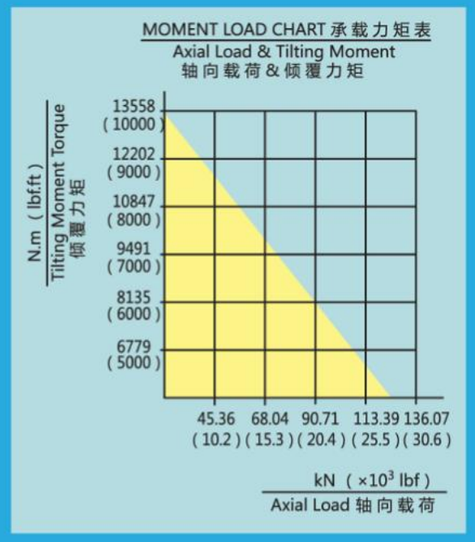

NOTICE 注意

▲ PLEASE BE SURE TO REMAIN UNDER THIS CURVE
选型时请确保实际载荷在曲线范围内

▲ This drawing is just for your reference
以上图纸仅供参考

▲ The drawing is subject to change due to new design without prior notice
本公司保留改进产品的权利而不再另行通知

SE9A/PE9A/ZE9A | SLEWING DRIVE 回转驱动

Units (单位): mm
1 inch = 25.4 mm

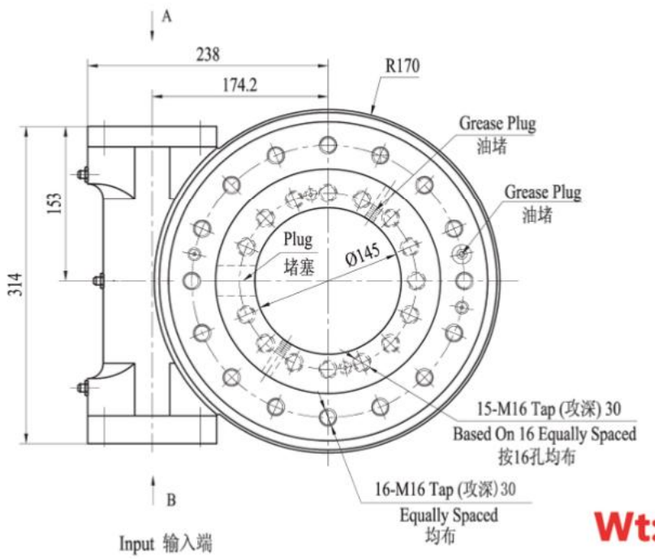

Wt: 49kg

VIEW A OPTION
A 向选项

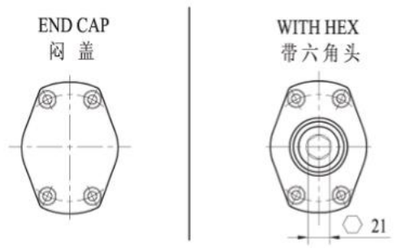

THRU HOLE OPTION
内外圈通孔选项

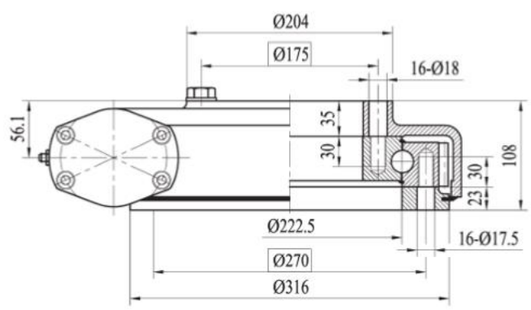

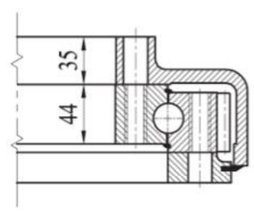

VIEW B OPTION
B 向选项

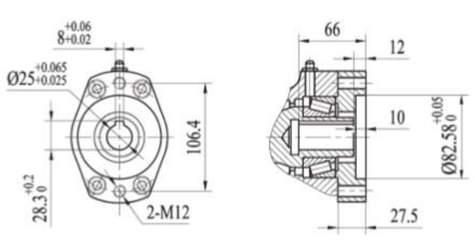

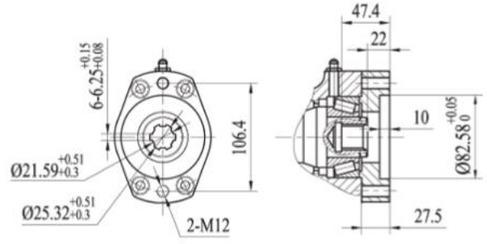

Ø12 Ø14 Ø16 Ø20 **Ø25**
■ NORMAL

6B SPLINE 花 键

LDB® SLEWING DRIVE

SE9A/PE9A/ZE9A | Slewing Drive Performance Parameters 回转式减速器性能参数表

Model 类型 \ Data 参数	Output Torque 输出转矩	Tilting Moment Torque 倾覆力矩	Holding Torque 保持力矩	Static Axial Rating 轴向静载荷	Static Radial Rating 径向静载荷	Dynamic Axial Rating 轴向动载荷	Dynamic Radial Rating 径向动载荷	Gear Ratio 减速比	Tracking Precision 精度等级	Weight 重量
SE9A	6.5 kN.m	33.9 kN.m	38.7 kN.m	338 kN	135 kN	81 kN	71 kN	61 :1	≤ 0.17°	49kg
	4794 lbft	25×10^3 lbft	29×10^3 lbft	76×10^3 lbft	30×10^3 lbft	18×10^3 lbft	16×10^3 lbft			
PE9A	6.5 kN.m	33.9 kN.m	38.7 kN.m	338 kN.m	135 kN	81 kN	71 kN	61 :1	I :≤ 0.05° II :≤ 0.07° III :≤ 0.09°	49kg
	4794 lbft	25×10^3 lbft	29×10^3 lbft	76×10^3 lbft	30×10^3 lbft	18×10^3 lbft	16×10^3 lbft			
ZE9A	3.9 kN.m	33.9 kN.m	38.7 kN.m	338 kN.m	135 kN	81 kN	71 kN	61 :1	0°	49kg
	2876 lbft	25×10^3 lbft	29×10^3 lbft	76×10^3 lbft	30×10^3 lbft	18×10^3 lbft	16×10^3 lbft			

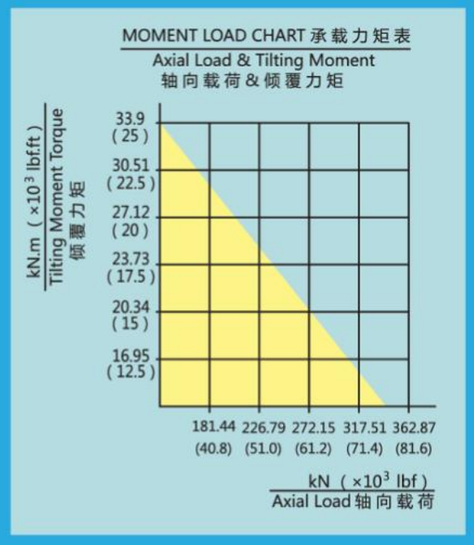

NOTICE 注意

▲ PLEASE BE SURE TO REMAIN UNDER THIS CURVE
选型时请确保实际载荷在曲线范围内

▲ This drawing is just for your reference
以上图纸仅供参考

▲ The drawing is subject to change due to new design without prior notice
本公司保留改进产品的权利而不再另行通知

SE12A/PE12A/ZE12A | SLEWING DRIVE 回转驱动

Units (单位): mm
1 inch = 25.4 mm

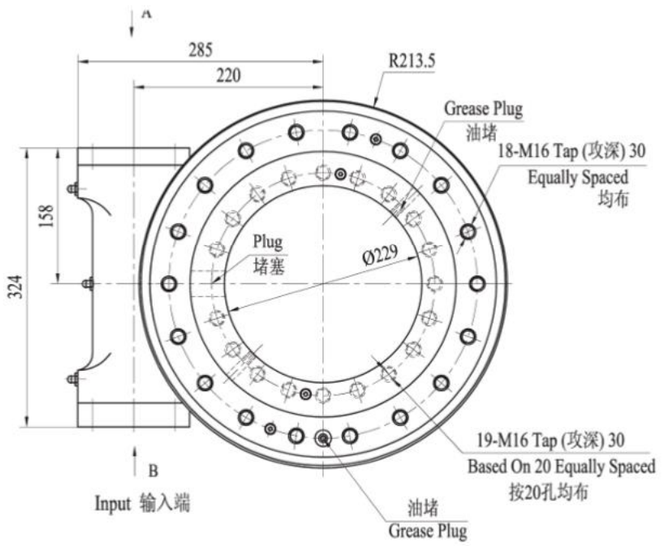

VIEW A OPTION

A 向选项

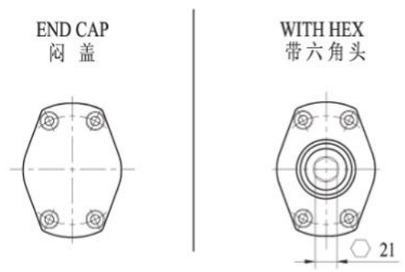

Wt: *61kg*

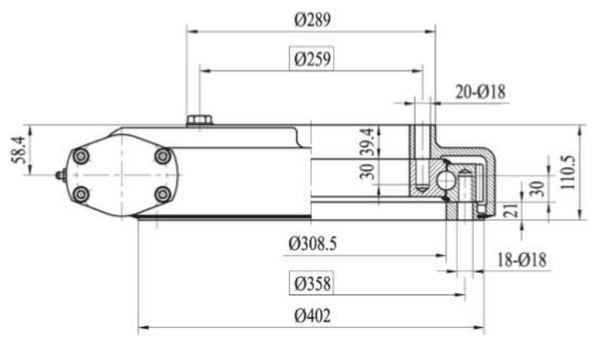

THRU HOLE OPTION

内外圈通孔选项

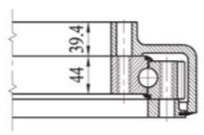

VIEW B OPTION

B 向选项

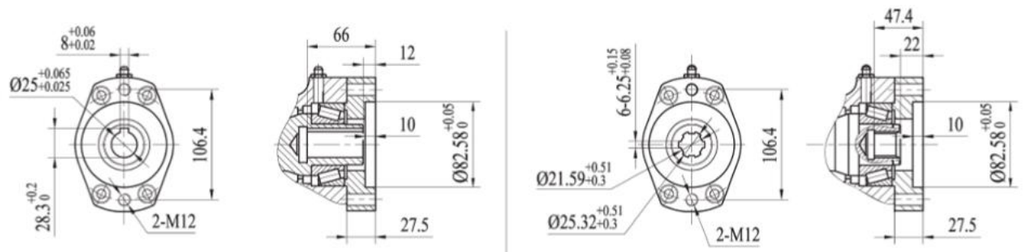

Ø12 Ø14 Ø16 Ø20 **Ø25**

■ NORMAL

6B SPLINE 花 键

LDB® SLEWING DRIVE

SE12A/PE12A/ZE12A | Slewing Drive Performance Parameters 回转式减速器性能参数表

Model 型号 \ Data 参数	Out Torque 输出转矩	Tilting Moment Torque 倾覆力矩	Holding Torque 保持力矩	Static Axial Rating 轴向静载荷	Static Radial Rating 径向静载荷	Dynamic Axial Rating 轴向动载荷	Dynamic Radial Rating 轴向动载荷	Gear Ratio 减速比	Tracking Precision 精度等级	Weight 重量
SE12A	7.5 kN.m	54.3 kN.m	43 kN.m	475 kN	190 kN	114 kN	100 kN	78 : 1	≤ 0.17°	61kg
	5532 lbft	40×10³ lbft	32×10³ lbft	107×10³ lbft	43×10³ lbft	26×10³ lbft	23×10³ lbft			
PE12A	7.5 kN.m	54.3 kN.m	43 kN.m	475 kN	190 kN	114 kN	100 kN	78 : 1	I :≤ 0.03° II :≤ 0.05° III:≤ 0.07°	61kg
	5532 lbft	40×10³ lbft	32×10³ lbft	107×10³ lbft	43×10³ lbft	26×10³ lbft	23×10³ lbft			
ZE12A	4.5 kN.m	54.3 kN.m	43 kN.m	475 kN	190 kN	114 kN	100 kN	78 : 1	0°	61kg
	3319 lbft	40×10³ lbft	32×10³ lbft	107×10³ lbft	43×10³ lbft	26×10³ lbft	23×10³ lbft			

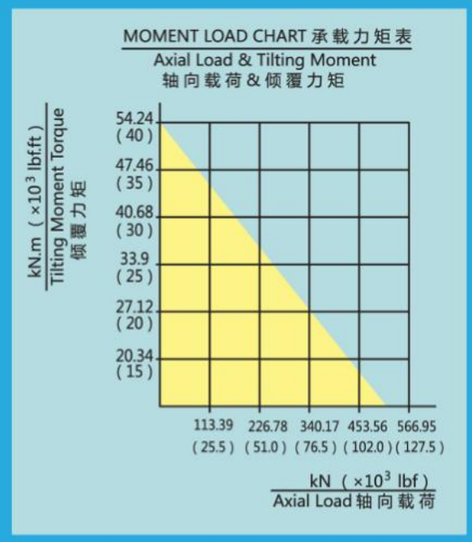

NOTICE 注意

▲ PLEASE BE SURE TO REMAIN UNDER THIS CURVE
选型时请确保实际载荷在曲线范围内

▲ This drawing is just for your reference
以上图纸仅供参考

▲ The drawing is subject to change due to new design without prior notice
本公司保留改进产品的权利而不再另行通知

SE14A/PE14A/ZE14A | SLEWING DRIVE 回转驱动

Units (单位): mm
1 inch = 25.4 mm

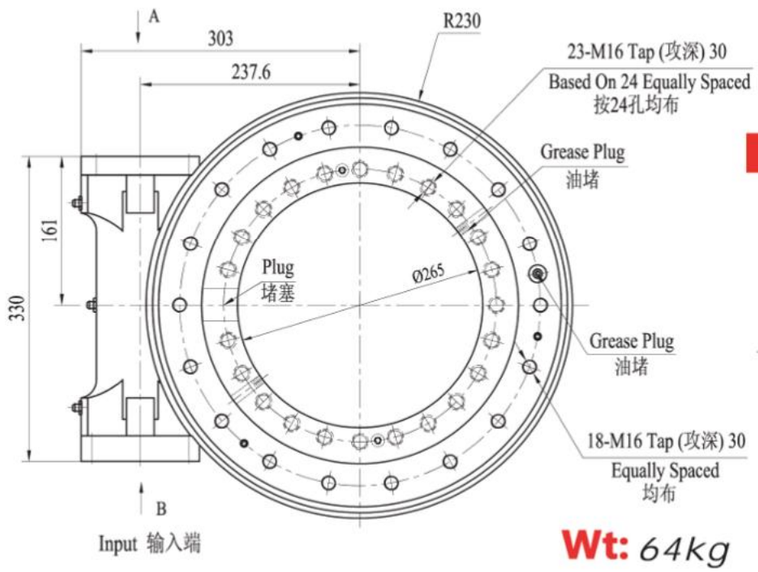

Wt: 64kg

VIEW A OPTION
A 向选项

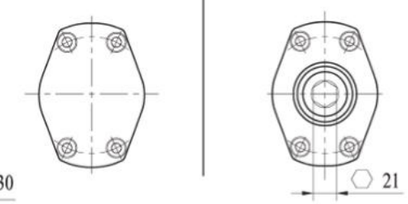

THRU HOLE OPTION
内外圈通孔选项

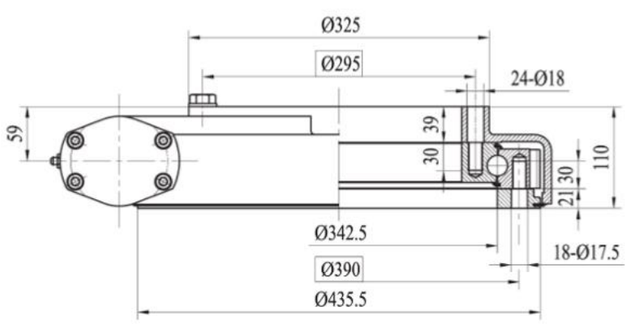

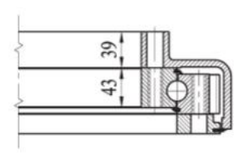

VIEW B OPTION
B 向选项

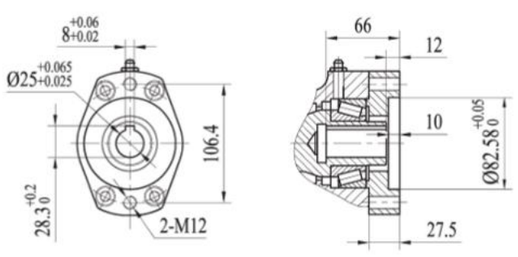

Ø12 Ø14 Ø16 Ø20 **Ø25**

■ NORMAL

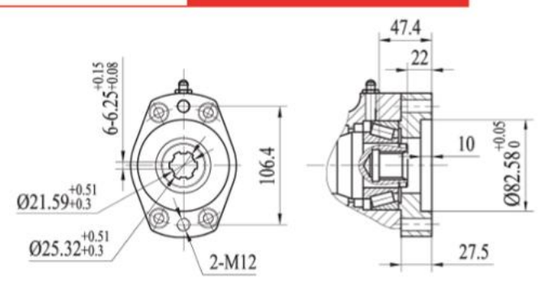

6B SPLINE 花 键

LDB® SLEWING DRIVE

SE14A/PE14A/ZE14A | Slewing Drive Performance Parameters 回转式减速器性能参数表

Model 型号 \ Data 参数	Out Torque 输出转矩	Tilting Moment Torque 倾覆力矩	Holding Torque 保持力矩	Static Axial Rating 轴向静载荷	Static Radial Rating 径向静载荷	Dynamic Axial Rating 轴向动载荷	Dynamic Radial Rating 轴向动载荷	Gear Ratio 减速比	Tracking Precision 精度等级	Weight 重量
SE14A	8 kN.m	67.8 kN.m	48 kN.m	555 kN	222 kN	133 kN	117 kN	85 :1	≤ 0.17°	64kg
	5900 lb.ft	50×10³ lb.ft	35×10³ lb.ft	125×10³ lb.ft	50×10³ lb.ft	30×10³ lb.ft	26×10³ lb.ft			
PE14A	8 kN.m	67.8 kN.m	48 kN.m	555 kN	222 kN	133 kN	117 kN	85 :1	Ⅰ:≤ 0.03° Ⅱ:≤ 0.05° Ⅲ:≤ 0.07° Ⅳ:≤ 0.09°	64kg
	5900 lb.ft	50×10³ lb.ft	35×10³ lb.ft	125×10³ lb.ft	50×10³ lb.ft	30×10³ lb.ft	26×10³ lb.ft			
ZE14A	4.8 kN.m	67.8 kN.m	48 kN.m	555 kN	222 kN	133 kN	117 kN	85 :1	0°	64kg
	3500 lb.ft	50×10³ lb.ft	35×10³ lb.ft	125×10³ lb.ft	50×10³ lb.ft	30×10³ lb.ft	26×10³ lb.ft			

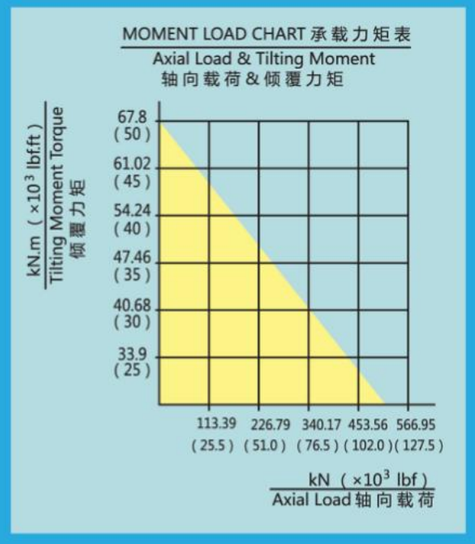

NOTICE 注意

▲ PLEASE BE SURE TO REMAIN UNDER THIS CURVE
选型时请确保实际载荷在曲线范围内

▲ This drawing is just for your reference
以上图纸仅供参考

▲ The drawing is subject to change due to new design without prior notice
本公司保留改进产品的权利而不再另行通知

SE17A/PE17A | SLEWING DRIVE 回转驱动

Units（单位）: mm
1 inch = 25.4 mm

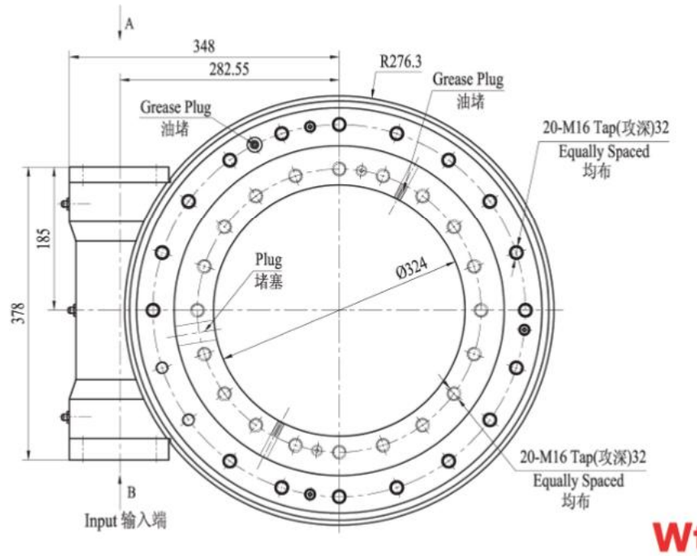

VIEW A OPTION

A 向选项

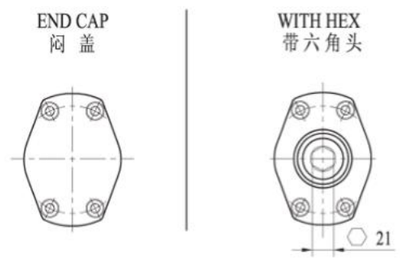

Wt: *105kg*

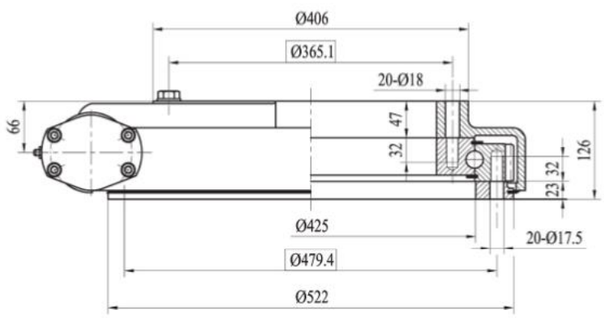

THRU HOLE OPTION

内外圈通孔选项

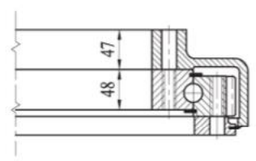

VIEW B OPTION

B 向选项

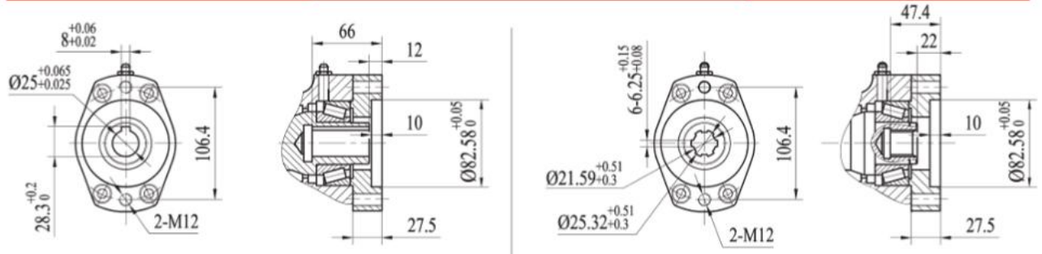

Ø12 Ø14 Ø16 Ø20 **Ø25**

■ NORMAL

6B SPLINE 花 键

LDB® SLEWING DRIVE

SE17A/PE17A/ | Slewing Drive Performance Parameters 回转式减速器性能参数表

Model 型号 / Data 参数	Out Torque 输出转矩	Tilting Moment Torque 倾覆力矩	Holding Torque 保持力矩	Static Axial Rating 轴向静载荷	Static Radial Rating 径向静载荷	Dynamic Axial Rating 轴向动载荷	Dynamic Radial Rating 轴向动载荷	Gear Ratio 减速比	Tracking Precision 精度等级	Weight 重量
SE17A	10 kN.m	135.6 kN.m	72.3 kN.m	970 kN	390 kN	235 kN	205 kN	102 : 1	≤ 0.15°	105kg
	7400 lbft	100×10^3 lbft	53×10^3 lbft	218×10^3 lbft	88×10^3 lbft	53×10^3 lbft	46×10^3 lbft			
PE17A	10 kN.m	135.6 kN.m	72.3 kN.m	970 kN	390 kN	235 kN	205 kN	102 : 1	Ⅰ:≤ 0.03° Ⅱ:≤ 0.05° Ⅲ:≤ 0.07° Ⅳ:≤ 0.09°	105kg
	7400 lbft	100×10^3 lbft	53×10^3 lbft	218×10^3 lbft	88×10^3 lbft	53×10^3 lbft	46×10^3 lbft			

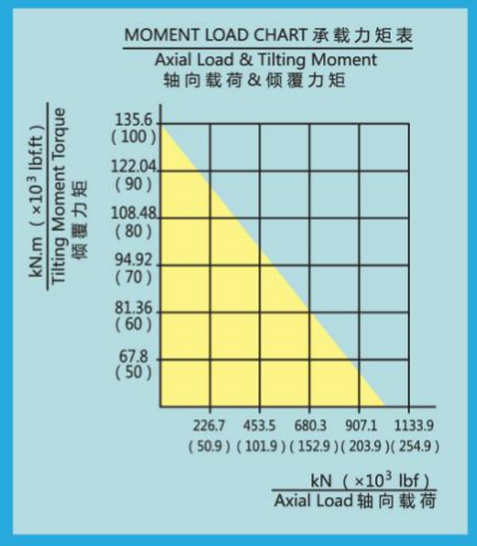

NOTICE 注意

▲ PLEASE BE SURE TO REMAIN UNDER THIS CURVE
选型时请确保实际载荷在曲线范围内

▲ This drawing is just for your reference
以上图纸仅供参考

▲ The drawing is subject to change due to new design without prior notice
本公司保留改进产品的权利而不再另行通知

SE21/PE21 | SLEWING DRIVE 回转驱动

Units (单位): mm
1 inch = 25.4 mm

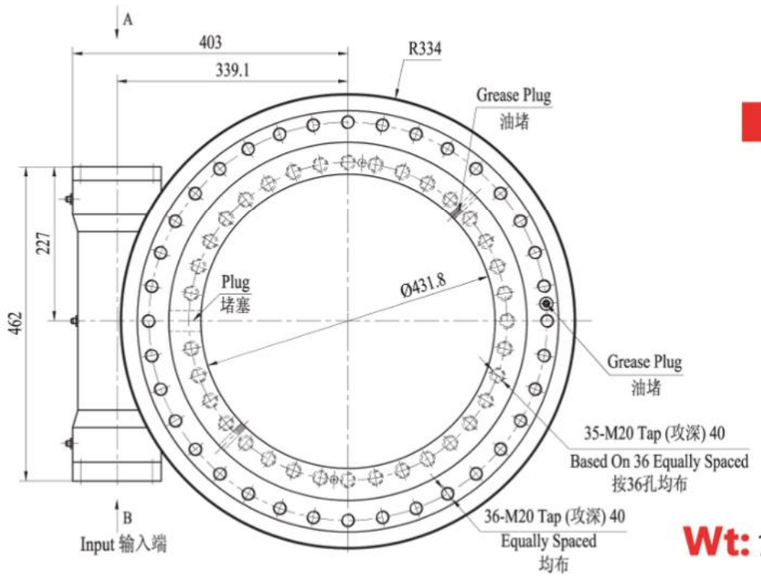

Wt: 149kg

VIEW A OPTION
A 向 选 项

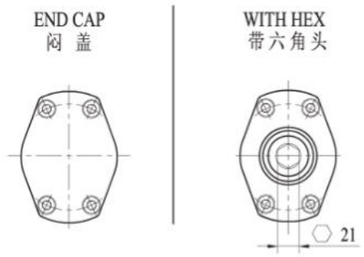

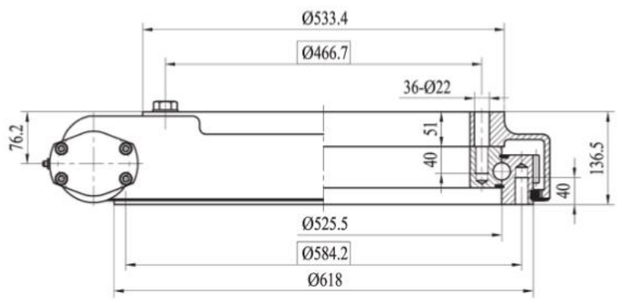

THRU HOLE OPTION
内外圈通孔选项

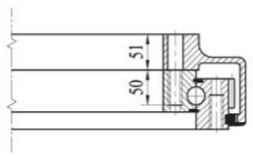

VIEW B OPTION
B 向 选 项

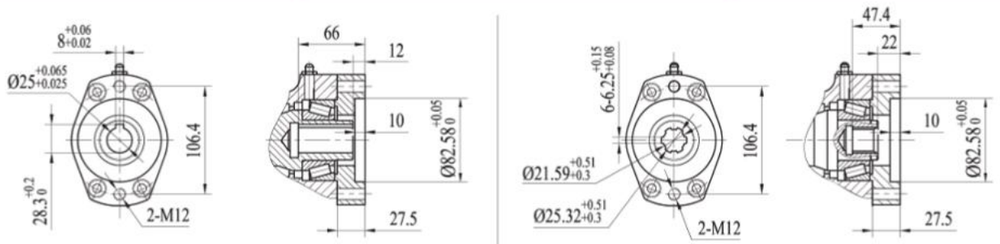

Ø12 Ø14 Ø16 Ø20 **Ø25**
■ NORMAL

6B SPLINE 花 键

LDB® SLEWING DRIVE

SE21/PE21 | Slewing Drive Performance Parameters 回转式减速器性能参数表

Model 型号 \ Data 参数	Out Torque 输出转矩	Tilting Moment Torque 倾覆力矩	Holding Torque 保持力矩	Static Axial Rating 轴向静载荷	Static Radial Rating 径向静载荷	Dynamic Axial Rating 轴向动载荷	Dynamic Radial Rating 轴向动载荷	Gear Ratio 减速比	Tracking Precision 精度等级	Weight 重量
SE21	15 kN.m	203 kN.m	105.8 kN.m	1598 kN	640 kN	385 kN	335 kN	125 : 1	≤ 0.15°	149kg
	11000 lbft	150×10^3 lbft	78×10^3 lbft	359×10^3 lbft	144×10^3 lbft	87×10^3 lbft	75×10^3 lbft			
PE21	15 kN.m	203 kN.m	105.8 kN.m	1598 kN	640 kN	385 kN	335 kN	125 : 1	I :≤ 0.03° II :≤ 0.05° III :≤ 0.07° IV :≤ 0.09°	149kg
	11000 lbft	150×10^3 lbft	78×10^3 lbft	359×10^3 lbft	144×10^3 lbft	87×10^3 lbft	75×10^3 lbft			

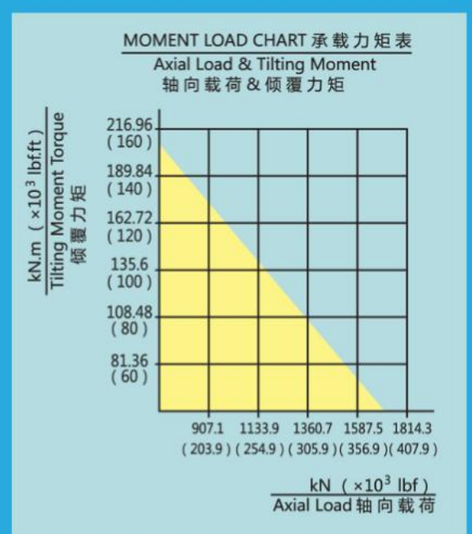

NOTICE 注意

▲ PLEASE BE SURE TO REMAIN UNDER THIS CURVE
选型时请确保实际载荷在曲线范围内

▲ This drawing is just for your reference
以上图纸仅供参考

▲ The drawing is subject to change due to new design without prior notice
本公司保留改进产品的权利而不再另行通知

SE25/PE25 | SLEWING DRIVE 回转驱动

Units（单位）: mm
1 inch = 25.4 mm

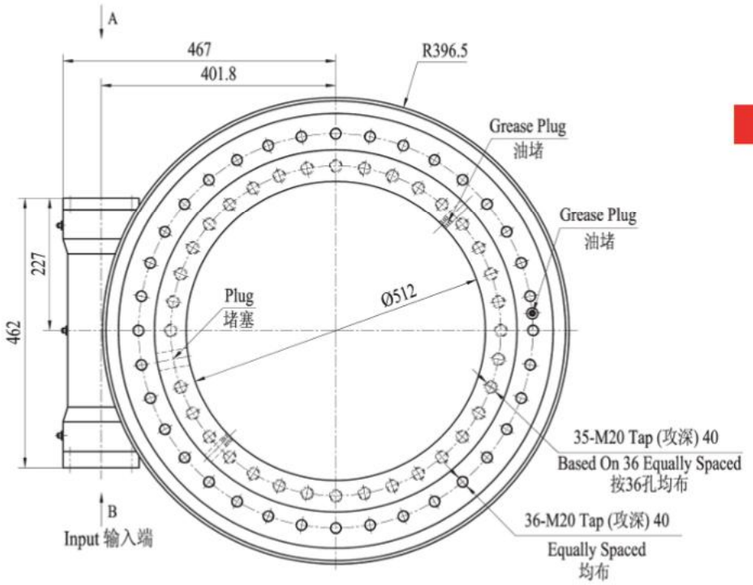

VIEW A OPTION
A 向 选 项

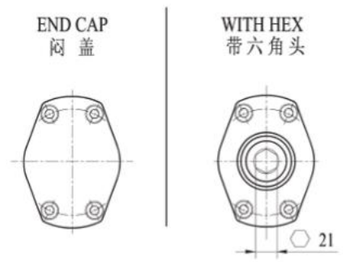

THRU HOLE OPTION
内外圈通孔选项

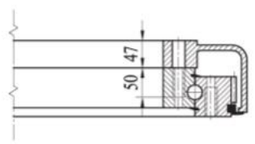

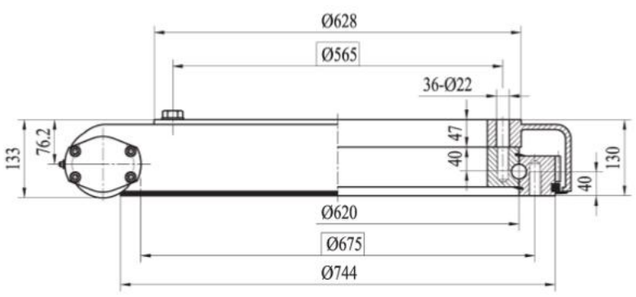

Wt: *204kg*

VIEW B OPTION
B 向 选 项

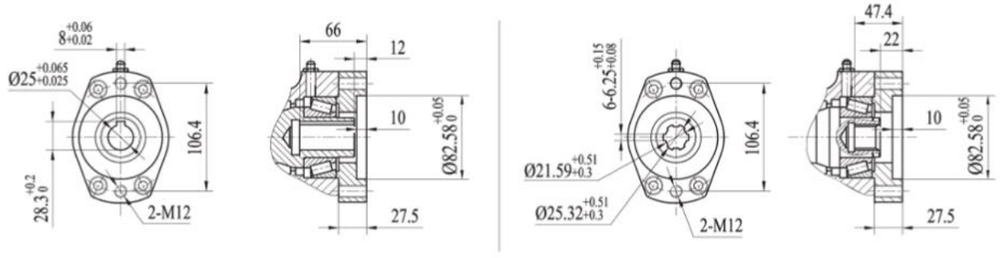

Ø12 Ø14 Ø16 Ø20 **Ø25**
■ NORMAL

6B SPLINE 花 键

LDB® SLEWING DRIVE

SE25/PE25 | Slewing Drive Performance Parameters 回转式减速器性能参数表

Model 型号 \ Data 参数	Out Torque 输出转矩	Tilting Moment Torque 倾覆力矩	Holding Torque 保持力矩	Static Axial Rating 轴向静载荷	Static Radial Rating 径向静载荷	Dynamic Axial Rating 轴向动载荷	Dynamic Radial Rating 轴向动载荷	Gear Ratio 减速比	Tracking Precision 精度等级	Weight 重量
SE25	18 kN.m	271 kN.m	158.3 kN.m	2360 kN	945 kN	590 kN	470 kN	150 : 1	≤ 0.15°	204kg
	13300 bf.ft	200×10³ bf.ft	117×10³ bf.ft	531×10³ bf	212×10³ bf	133×10³ bf	106×10³ bf			
PE25	18 kN.m	271 kN.m	158.3 kN.m	2360 kN	945 kN	590 kN	470 kN	150 : 1	Ⅰ:≤ 0.03° Ⅱ:≤ 0.05° Ⅲ:≤ 0.07° Ⅳ:≤ 0.09°	204kg
	13300 bf.ft	200×10³ bf.ft	117×10³ bf.ft	531×10³ bf	212×10³ bf	133×10³ bf	106×10³ bf			

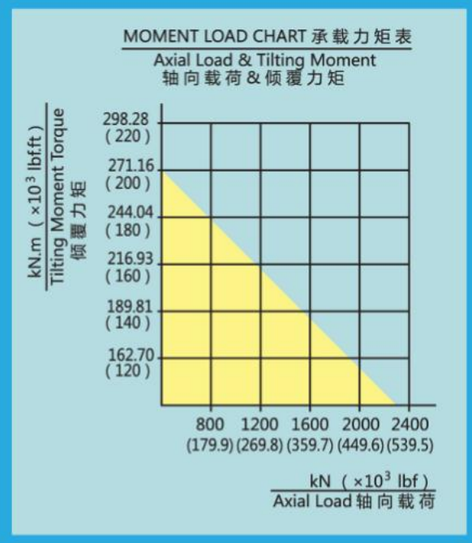

NOTICE 注意

▲ PLEASE BE SURE TO REMAIN UNDER THIS CURVE
选型时请确保实际载荷在曲线范围内

▲ This drawing is just for your reference
以上图纸仅供参考

▲ The drawing is subject to change due to new design without prior notice
本公司保留改进产品的权利而不再另行通知

S9 | SLEWING DRIVE 回转驱动

Units（单位）: mm
1 inch = 25.4 mm

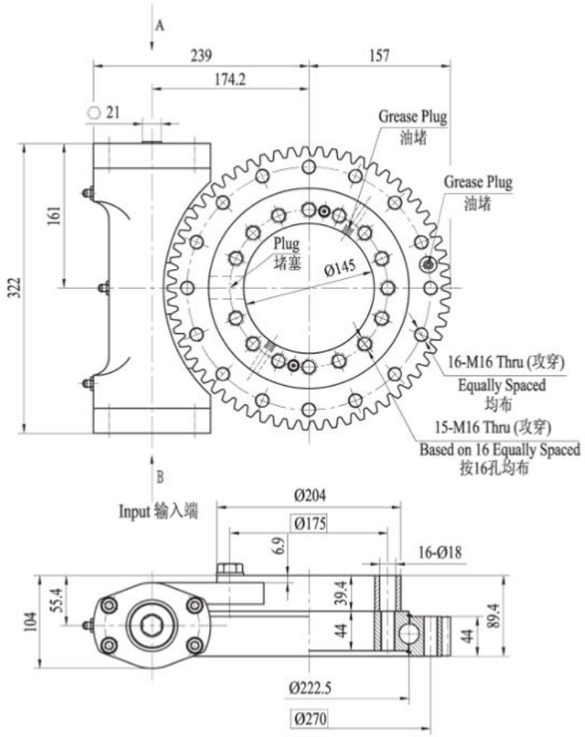

Wt: *37kg*

VIEW B

B 向 视 图

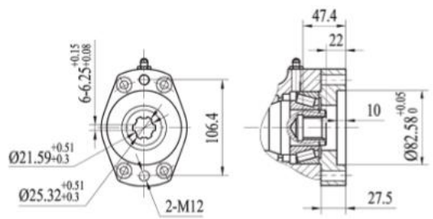

6B Ø12 Ø14 Ø16 Ø20 **Ø25**

■ NORMAL

S9 Slewing Drive Performance Parameters / 回转驱动性能参数表

Model 型号 \ Data 参数	Out Torque 输出转矩	Tilting Moment Torque 倾覆力矩	Holding Torque 保持力矩	Static Axial Rating 轴向静载荷	Static Radial Rating 径向静载荷	Dynamic Axial Rating 轴向动载荷	Dynamic Radial Rating 轴向动载荷	Gear Ratio 减速比	Tracking Precision 精度等级	Weight 重量
S9	6.5 kN.m	33.9 kN.m	38.7 kN.m	338 kN	135 kN	81 kN	71 kN	61 :1	≤ 0.17°	37kg
	4794 lbfft	25×10³ lbfft	29×10³ lbfft	76×10³ lbfft	30×10³ lbfft	18×10³ lbfft	16×10³ lbfft			

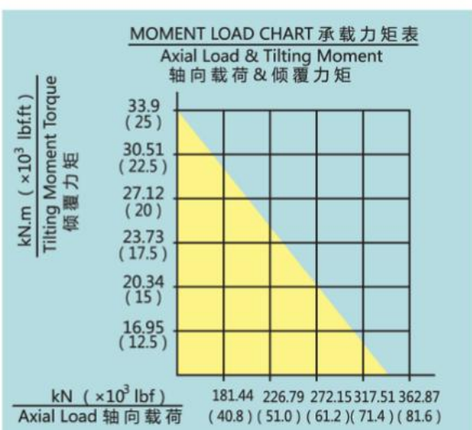

NOTICE 注意

▲ PLEASE BE SURE TO REMAIN UNDER THIS CURVE
选型时请确保实际载荷在曲线范围内

▲ This drawing is just for your reference
以上图纸仅供参考

▲ The drawing is subject to change due to new design without prior notice
本公司保留改进产品的权利而不再另行通知

S12 | SLEWING DRIVE 回转驱动

Units（单位）: mm
1 inch = 25.4 mm

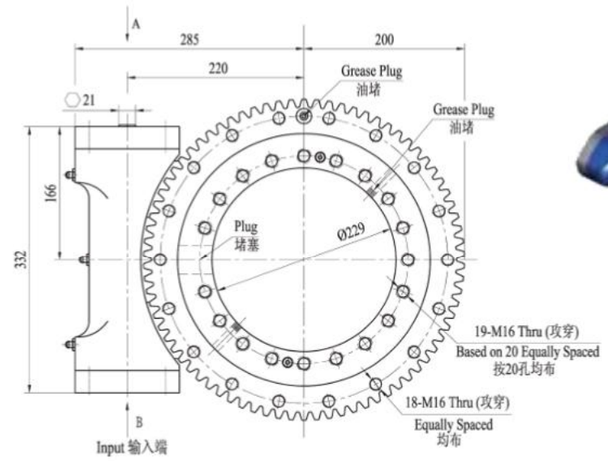

Wt: *41kg*

VIEW B

B 向 视 图

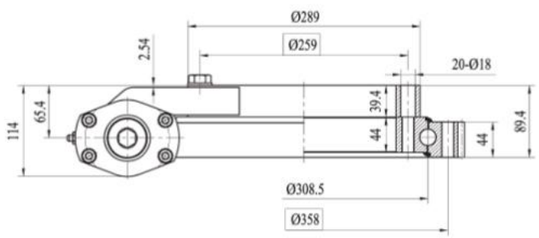

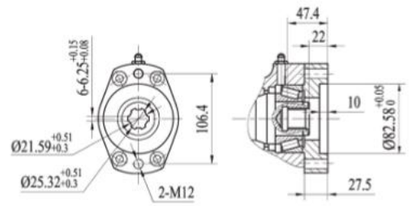

6B Ø12 Ø14 Ø16 Ø20 **Ø25**

■ NORMAL

S12 Slewing Drive Performance Parameters / 回转驱动性能参数表

Model 型号 \ Data 参数	Out Torque 输出转矩	Tilting Moment Torque 倾覆力矩	Holding Torque 保持力矩	Static Axial Rating 轴向静载荷	Static Radial Rating 径向静载荷	Dynamic Axial Rating 轴向动载荷	Dynamic Radial Rating 轴向动载荷	Gear Ratio 减速比	Tracking Precision 精度等级	Weight 重量
S12	7.5 kN.m	54.3 kN.m	43 kN.m	475 kN	190 kN	114 kN	100 kN	78 :1	≤ 0.17°	41kg
	5532 lbfft	40×10³ lbfft	32×10³ lbfft	107×10³ lbfft	43×10³ lbfft	26×10³ lbfft	23×10³ lbfft			

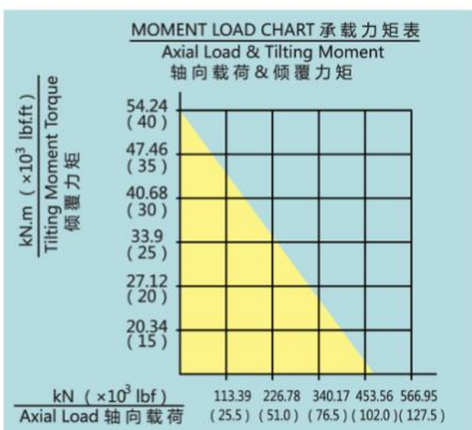

NOTICE 注意

▲ PLEASE BE SURE TO REMAIN UNDER THIS CURVE
选型时请确保实际载荷在曲线范围内

▲ This drawing is just for your reference
以上图纸仅供参考

▲ The drawing is subject to change due to new design without prior notice
本公司保留改进产品的权利而不再另行通知

S14 | SLEWING DRIVE 回转驱动

Units（单位）: mm
1 inch = 25.4 mm

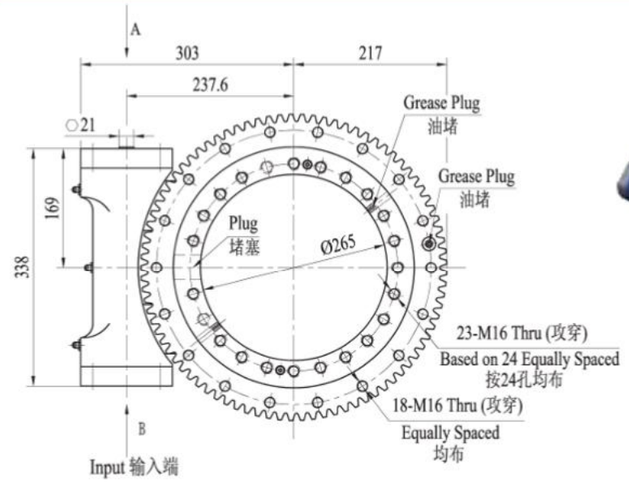

Wt: *47kg*

VIEW B

B 向视图

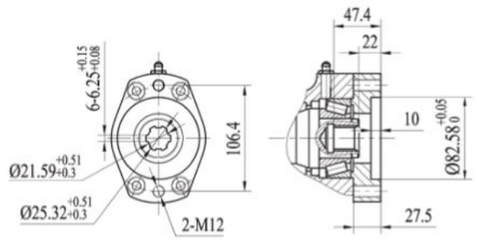

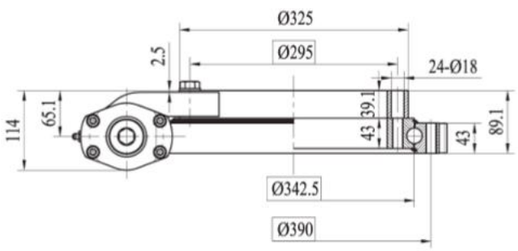

6B Ø12 Ø14 Ø16 Ø20 **Ø25**

■ NORMAL

S14 Slewing Drive Performance Parameters / 回转驱动性能参数表

Model 型号 \ Data 参数	Out Torque 输出转矩	Tilting Moment Torque 倾覆力矩	Holding Torque 保持力矩	Static Axial Rating 轴向静载荷	Static Radial Rating 径向静载荷	Dynamic Axial Rating 轴向动载荷	Dynamic Radial Rating 轴向动载荷	Gear Ratio 减速比	Tracking Precision 精度等级	Weight 重量
S14	8 kN.m	67.8 kN.m	48 kN.m	555 kN	222 kN	133 kN	117 kN	85 :1	≤ 0.17°	47kg
	5900 lbfft	50×10^3 lbfft	35×10^3 lbfft	125×10^3 lbfft	50×10^3 lbfft	30×10^3 lbfft	26×10^3 lbfft			

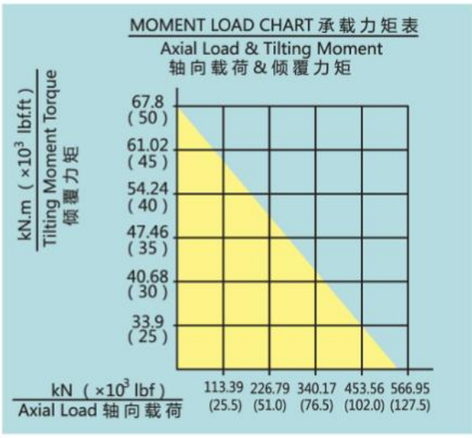

NOTICE 注意

▲ PLEASE BE SURE TO REMAIN UNDER THIS CURVE
选型时请确保实际载荷在曲线范围内

▲ This drawing is just for your reference
以上图纸仅供参考

▲ The drawing is subject to change due to new design without prior notice
本公司保留改进产品的权利而不再另行通知

S17 | SLEWING DRIVE 回转驱动

Units（单位）: mm
1 inch = 25.4 mm

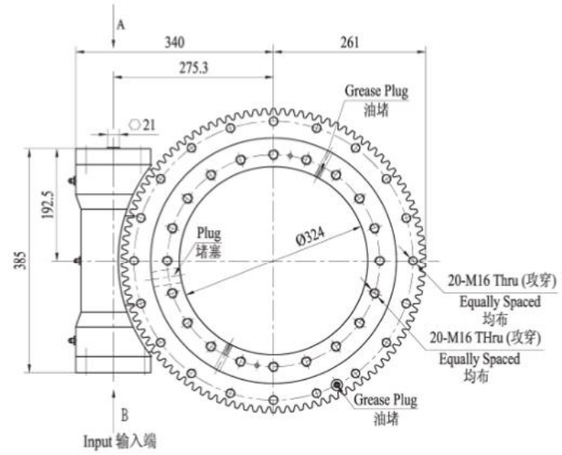

Wt: *87kg*

VIEW B

B 向视图

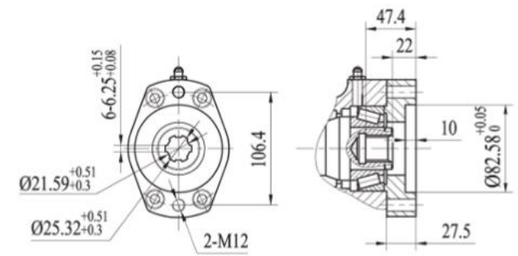

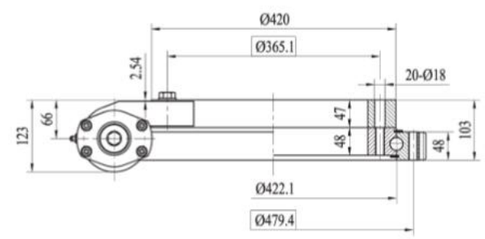

6B Ø12 Ø14 Ø16 Ø20 **Ø25**

■ NORMAL

S17 Slewing Drive Performance Parameters / 回转驱动性能参数表

Model 型号 \ Data 参数	Out Torque 输出转矩	Tilting Moment Torque 倾覆力矩	Holding Torque 保持力矩	Static Axial Rating 轴向静载荷	Static Radial Rating 径向静载荷	Dynamic Axial Rating 轴向动载荷	Dynamic Radial Rating 轴向动载荷	Gear Ratio 减速比	Tracking Precision 精度等级	Weight 重量
S17	10 kN.m	135.6 kN.m	72.3 kN.m	970 kN	390 kN	235 kN	205 kN	102 :1	≤ 0.15°	87kg
	7400 lbfft	100×10^3 lbfft	53×10^3 lbfft	218×10^3 lbfft	88×10^3 lbfft	53×10^3 lbfft	46×10^3 lbfft			

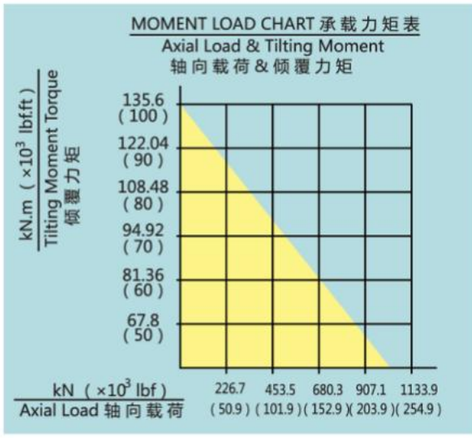

NOTICE 注意

▲ PLEASE BE SURE TO REMAIN UNDER THIS CURVE
选型时请确保实际载荷在曲线范围内

▲ This drawing is just for your reference
以上图纸仅供参考

▲ The drawing is subject to change due to new design without prior notice
本公司保留改进产品的权利而不再另行通知

SE14-2/S14-2 | SLEWING DRIVE 回转驱动

Units (单位): mm
1 inch = 25.4 mm

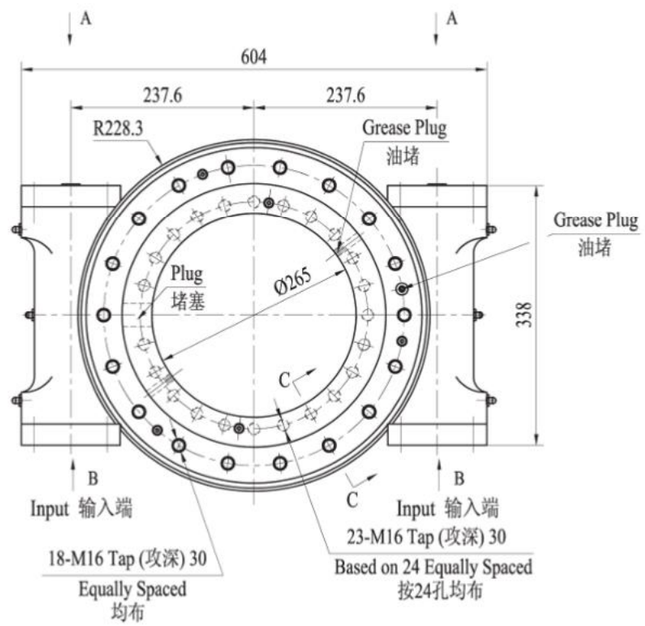

Wt: 76kg

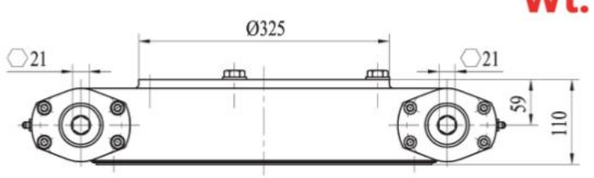

VIEW A OPTION
A 向选项

WITH HEX
带六角头

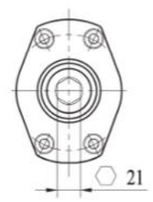

SECTION C
C 向剖视

BLIND HOLE
盲孔

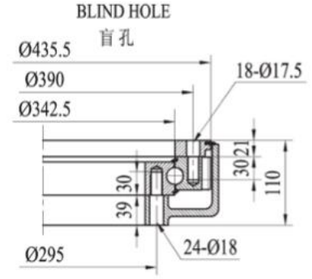

THRU HOLE
通孔

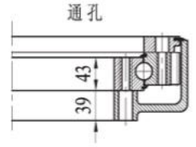

VIEW B OPTION
B 向选项

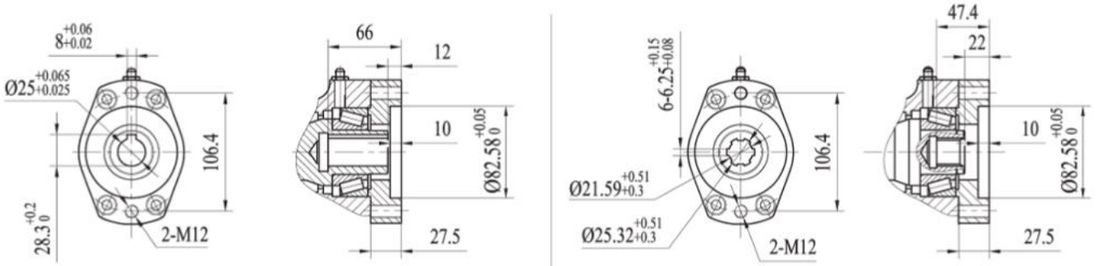

Ø12 Ø14 Ø16 Ø20 **Ø25**

■ NORMAL

6B SPLINE 花 键

LDB® SLEWING DRIVE

SE14-2/S14-2 | Slewing Drive Performance Parameters 回转式减速器性能参数表

Model 型号 \ Data 参数	Out Torque 输出转矩	Tilting Moment Torque 倾覆力矩	Holding Torque 保持力矩	Static Axial Rating 轴向静载荷	Static Radial Rating 径向静载荷	Dynamic Axial Rating 轴向动载荷	Dynamic Radial Rating 轴向动载荷	Gear Ratio 减速比	Tracking Precision 精度等级	Weight 重量
SE14-2	12 kN.m	67.8 kN.m	48 kN.m	555 kN	222 kN	133 kN	117 kN	85 : 1	≤ 0.17°	76kg
	8851 lb.ft	50×10^3 lb.ft	35×10^3 lb.ft	125×10^3 lb.ft	50×10^3 lb.ft	30×10^3 lb.ft	26×10^3 lb.ft			
S14-2	12 kN.m	67.8 kN.m	48 kN.m	555 kN	222 kN	133 kN	117 kN	85 : 1	≤ 0.17°	62kg
	8851 lb.ft	50×10^3 lb.ft	35×10^3 lb.ft	125×10^3 lb.ft	50×10^3 lb.ft	30×10^3 lb.ft	26×10^3 lb.ft			

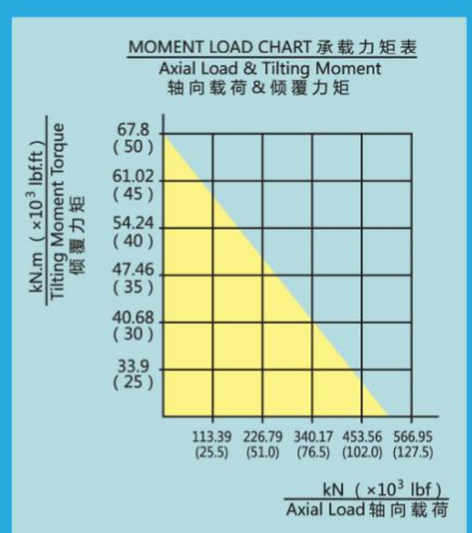

NOTICE 注意

▲ PLEASE BE SURE TO REMAIN UNDER THIS CURVE
选型时请确保实际载荷在曲线范围内

▲ This drawing is just for your reference
以上图纸仅供参考

▲ The drawing is subject to change due to new design without prior notice
本公司保留改进产品的权利而不再另行通知

SE17-2/S17-2 | SLEWING DRIVE 回转驱动

Units (单位): mm
1 inch = 25.4 mm

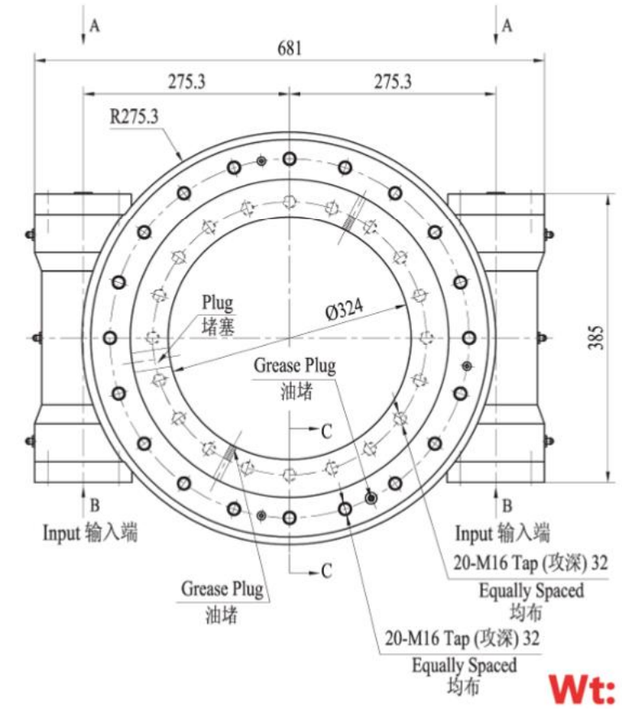

Wt: 119kg

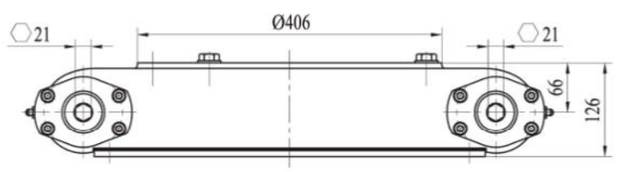

VIEW A OPTION

A 向选项

WITH HEX
带六角头

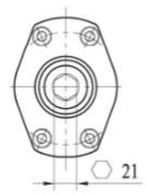

SECTION C

C 向剖视

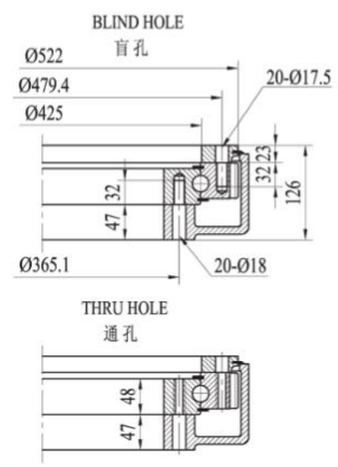

VIEW B OPTION

B 向选项

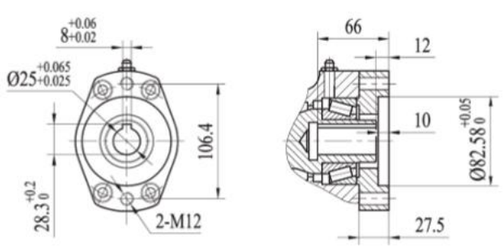

Ø12 Ø14 Ø16 Ø20 **Ø25**

■ NORMAL

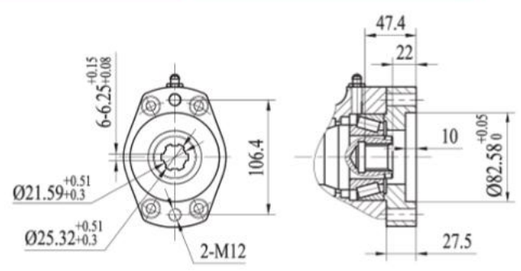

6B SPLINE 花 键

LDB® SLEWING DRIVE

SE17-2/S17-2 | Slewing Drive Performance Parameters 回转式减速器性能参数表

Model 型号 \ Data 参数	Out Torque 输出转矩	Tilting Moment Torque 倾覆力矩	Holding Torque 保持力矩	Static Axial Rating 轴向静载荷	Static Radial Rating 径向静载荷	Dynamic Axial Rating 轴向动载荷	Dynamic Radial Rating 轴向动载荷	Gear Ratio 减速比	Tracking Precision 精度等级	Weight 重量
SE17-2	16.8 kN.m	135.6 kN.m	72.3 kN.m	970 kN	390 kN	235 kN	205 kN	102 : 1	≤ 0.15°	119kg
	12391 lbft	100×10³ lbft	53×10³ lbft	218×10³ lbft	88×10³ lbft	53×10³ lbft	46×10³ lbft			
S17-2	16.8 kN.m	135.6 kN.m	72.3 kN.m	970 kN	390 kN	235 kN	205 kN	102 : 1	≤ 0.15°	102kg
	12391 lbft	100×10³ lbft	53×10³ lbft	218×10³ lbft	88×10³ lbft	53×10³ lbft	46×10³ lbft			

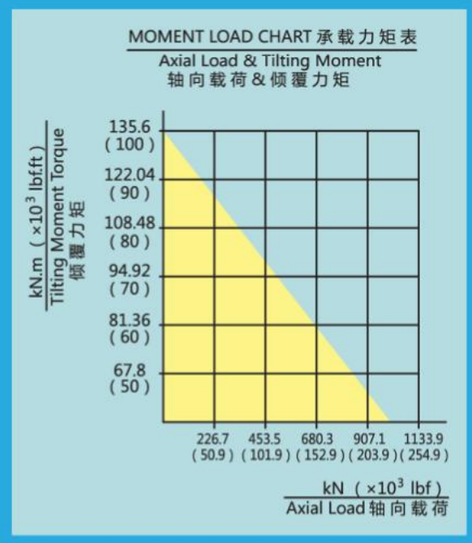

NOTICE 注意

▲ PLEASE BE SURE TO REMAIN UNDER THIS CURVE
选型时请确保实际载荷在曲线范围内

▲ This drawing is just for your reference
以上图纸仅供参考

▲ The drawing is subject to change due to new design without prior notice
本公司保留改进产品的权利而不再另行通知

SE21-2/S21-2 | SLEWING DRIVE 回转驱动

Units (单位): mm
1 inch = 25.4 mm

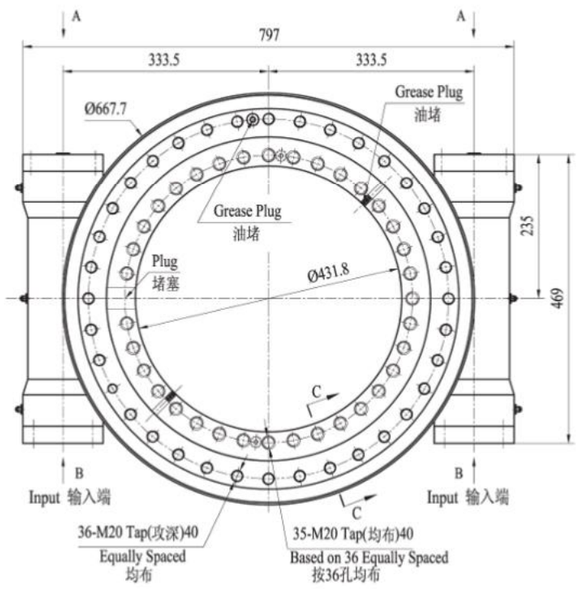

Wt: *161kg*

VIEW A OPTION
A 向选项

WITH HEX
带六角头

SECTION C
C 向剖视

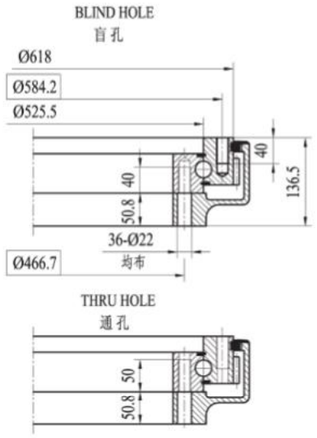

VIEW B OPTION
B 向选项

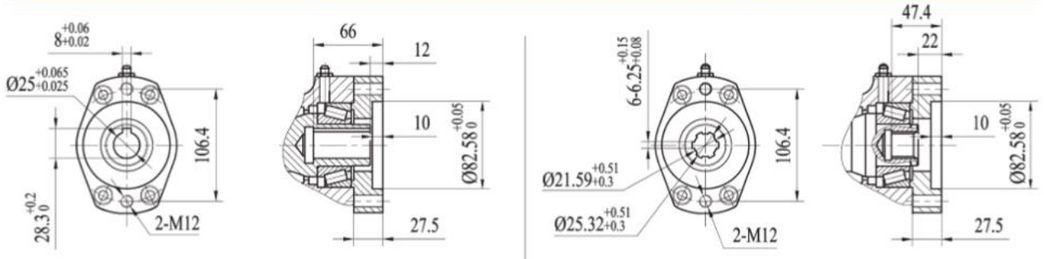

Ø12 Ø14 Ø16 Ø20 **Ø25**

■ NORMAL

6B SPLINE 花 键

LDB® SLEWING DRIVE

SE21-2/S21-2 | Slewing Drive Performance Parameters 回转式减速器性能参数表

Model 型号 / Data 参数	Out Torque 输出转矩	Tilting Moment Torque 倾覆力矩	Holding Torque 保持力矩	Static Axial Rating 轴向静载荷	Static Radial Rating 径向静载荷	Dynamic Axial Rating 轴向动载荷	Dynamic Radial Rating 轴向动载荷	Gear Ratio 减速比	Tracking Precision 精度等级	Weight 重量
SE21-2	20.6 kN.m 15194 lb.ft	203 kN.m 150×10^3 lb.ft	105.8 kN.m 78×10^3 lb.ft	1598 kN 359×10^3 lb.ft	640 kN 144×10^3 lb.ft	385 kN 87×10^3 lb.ft	335 kN 75×10^3 lb.ft	125 : 1	≤ 0.15°	161kg
S21-2	20.6 kN.m 15194 lb.ft	203 kN.m 150×10^3 lb.ft	105.8 kN.m 78×10^3 lb.ft	1598 kN 359×10^3 lb.ft	640 kN 144×10^3 lb.ft	385 kN 87×10^3 lb.ft	335 kN 75×10^3 lb.ft	125 : 1	≤ 0.15°	143kg

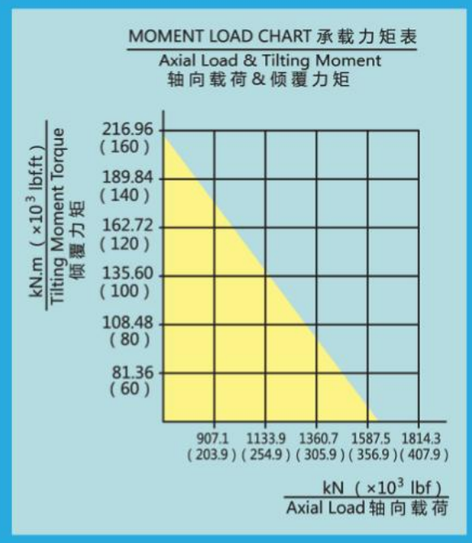

NOTICE 注意

▲ PLEASE BE SURE TO REMAIN UNDER THIS CURVE
选型时请确保实际载荷在曲线范围内

▲ This drawing is just for your reference
以上图纸仅供参考

▲ The drawing is subject to change due to new design without prior notice
本公司保留改进产品的权利而不再另行通知

SE25-2/S25-2 | SLEWING DRIVE 回转驱动

Units（单位）: mm
1 inch = 25.4 mm

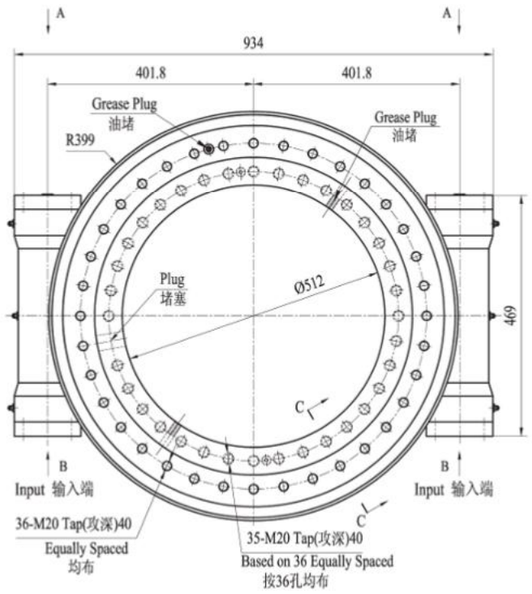

Wt: *222kg*

VIEW A OPTION
A 向选项

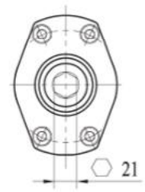

SECTION C
C 向剖视

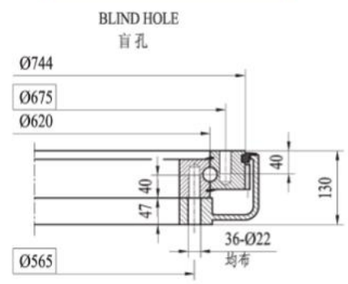

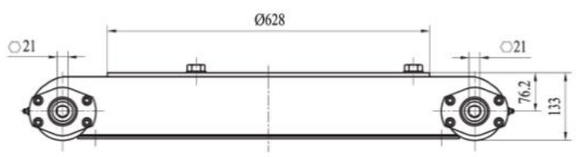

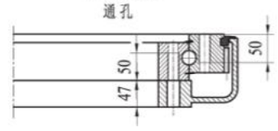

VIEW B OPTION
B 向选项

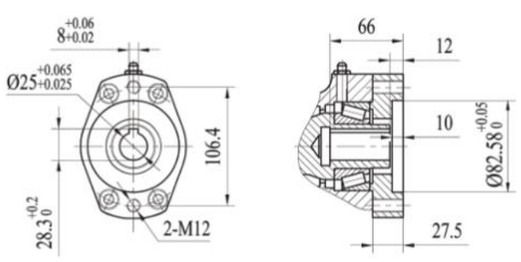

Ø12 Ø14 Ø16 Ø20 **Ø25**

■ NORMAL

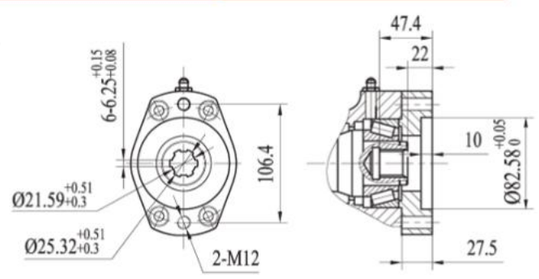

6B SPLINE 花 键

LDB® SLEWING DRIVE

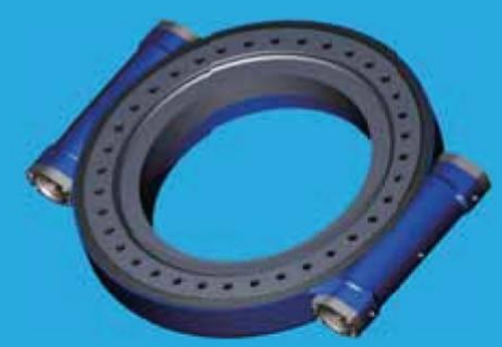

SE25-2/S25-2 | Slewing Drive Performance Parameters 回转式减速器性能参数表

Model 型号 \ Data 参数	Out Torque 输出转矩	Tilting Moment Torque 倾覆力矩	Holding Torque 保持力矩	Static Axial Rating 轴向静载荷	Static Radial Rating 径向静载荷	Dynamic Axial Rating 轴向动载荷	Dynamic Radial Rating 轴向动载荷	Gear Ratio 减速比	Tracking Precision 精度等级	Weight 重量
SE25-2	28 kN.m	271 kN.m	158.3 kN.m	2360 kN	945 kN	590 kN	470 kN	150 : 1	≤ 0.15°	222kg
	20652 lb.ft	200×10^3 lb.ft	117×10^3 lb.ft	531×10^3 lb.ft	212×10^3 lb.ft	133×10^3 lb.ft	106×10^3 lb.ft			
S25-2	28 kN.m	271 kN.m	158.3 kN.m	2360 kN	945 kN	590 kN	470 kN	150 : 1	≤ 0.15°	202kg
	20652 lb.ft	200×10^3 lb.ft	117×10^3 lb.ft	531×10^3 lb.ft	212×10^3 lb.ft	133×10^3 lb.ft	106×10^3 lb.ft			

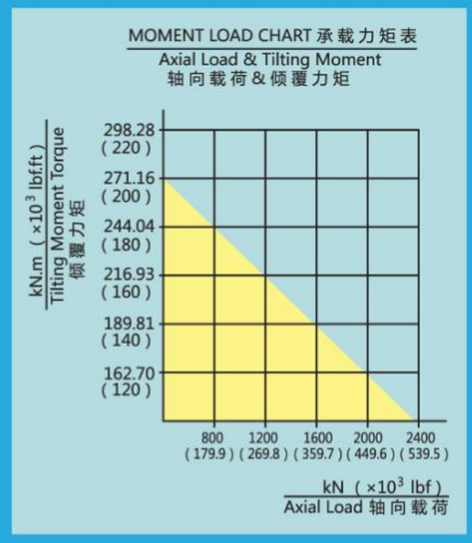

NOTICE 注意

▲ PLEASE BE SURE TO REMAIN UNDER THIS CURVE
选型时请确保实际载荷在曲线范围内

▲ This drawing is just for your reference
以上图纸仅供参考

▲ The drawing is subject to change due to new design without prior notice
本公司保留改进产品的权利而不再另行通知

VE3/PVE3 | SLEWING DRIVE 回转式减速器

Units (单位): mm
1 inch = 25.4 mm

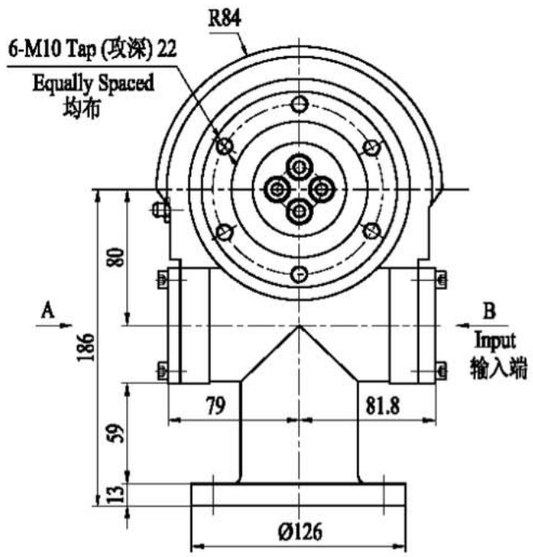

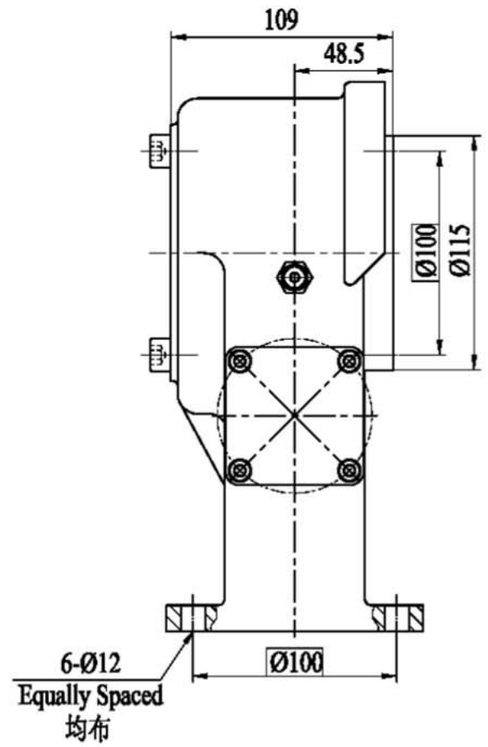

Wt: 17kg

VIEW A
A 向视图

VIEW B
B 向视图

END CAP
闷 盖

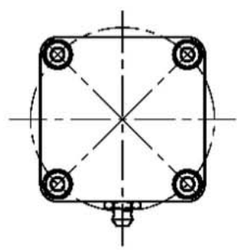

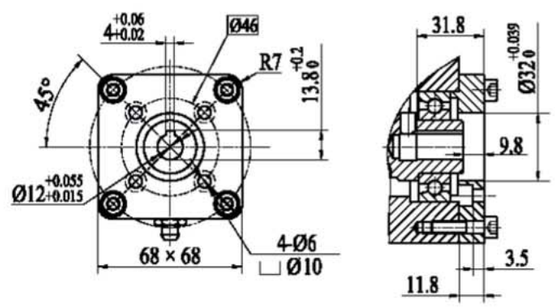

"A" VIEW AS INPUT IS AVAILABLE
输入端允许在"A"向视图

CUSTOMIZED UPON REQUESTS
可根据顾客的要求进行非标设计

VE3/PVE3 | Slewing Drive Performance Parameters
回转式减速器性能参数表

Data 参数 / Model 类型	Output Torque 输出转矩	Tilting Moment Torque 倾覆力矩	Holding Torque 保持力矩	Static Axial Rating 轴向静载荷	Static Radial Rating 径向静载荷	Dynamic Axial Rating 轴向动载荷	Dynamic Radial Rating 径向动载荷	Gear Ratio 减速比	Tracking Precision 精度等级	Weight 重量
VE3	400 N.m	500 N.m	2000 N.m	30 kN	15 kN	9.6 kN	8.4 kN	62 : 1	≤ 0.2°	17kg
	295 lbf.ft	369 lbf.ft	1475 lbf.ft	6744 lbf	3372 lbf	2158 lbf	1888 lbf			
PVE3	400 N.m	500 N.m	2000 N.m	30 kN	15 kN	9.6 kN	8.4 kN	62 : 1	I :≤ 0.08° II :≤ 0.12° III :≤ 0.15°	17kg
	295 lbf.ft	369 lbf.ft	1475 lbf.ft	6744 lbf	3372 lbf	2158 lbf	1888 lbf			

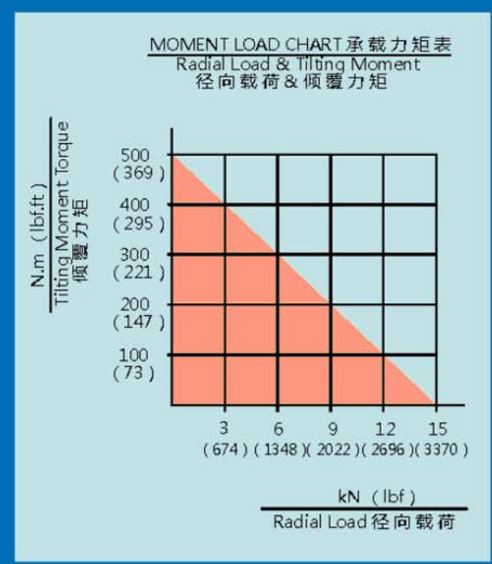

NOTICE 注意

▲ PLEASE BE SURE TO REMAIN UNDER THIS CURVE
选型时请确保实际载荷在曲线范围内

▲ This drawing is just for your reference
以上图纸仅供参考

▲ The drawing is subject to change due to new design without prior notice
本公司保留改进产品的权利而不再另行通知

VE6/PVE6 | SLEWING DRIVE 回转式减速器

Units (单位): mm
1 inch = 25.4 mm

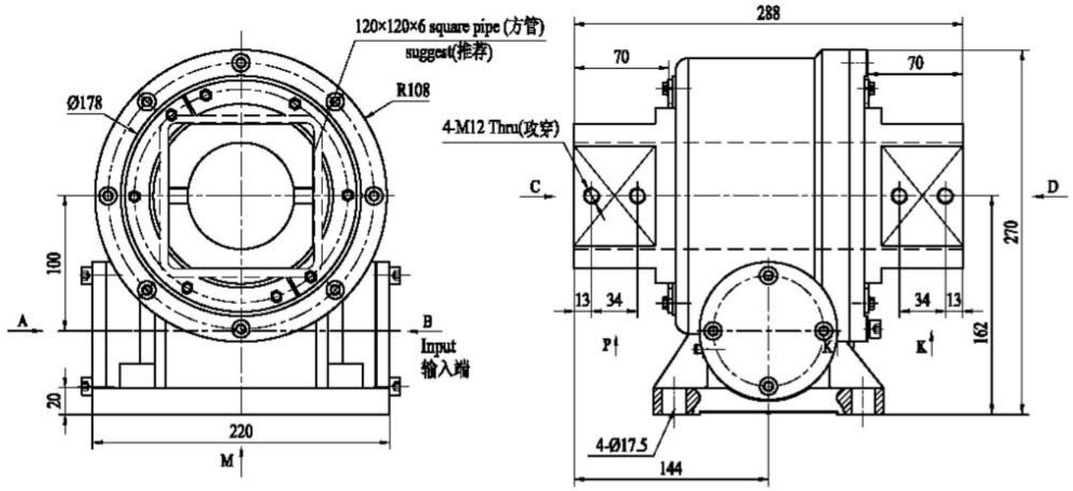

VIEW M
M 向视图

VIEW B
B 向视图

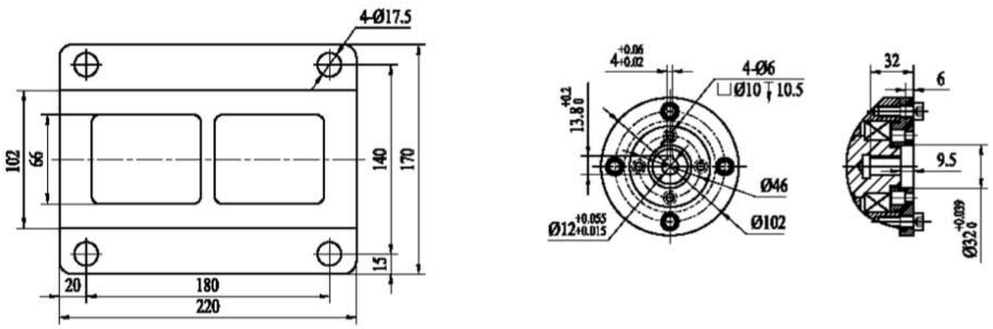

VIEW A
A 向视图

VIEW C & D
C、D 向视图

VIEW P & K
P、K 向视图

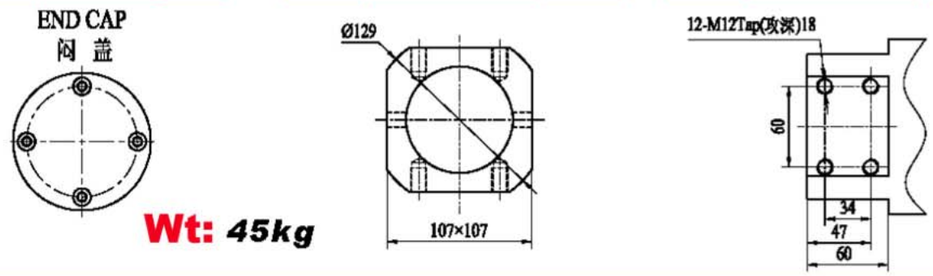

Wt: 45kg

"A" VIEW AS INPUT IS AVAILABLE
输入端允许在"A"向视图

CUSTOMIZED UPON REQUESTS
可根据顾客的要求进行非标设计

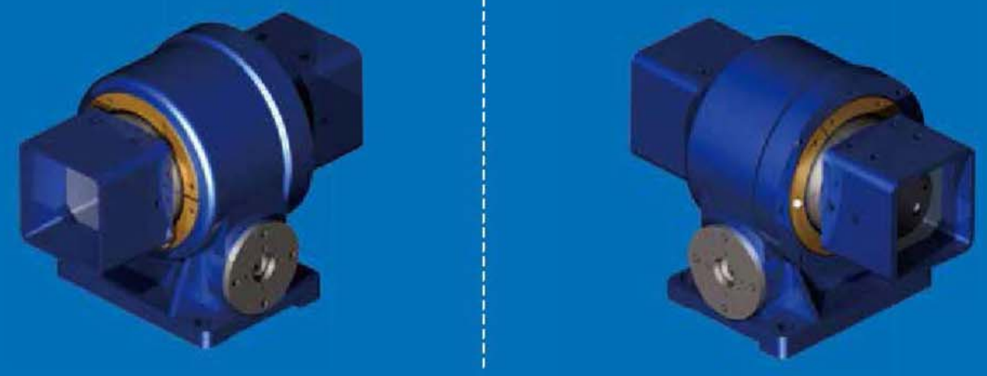

VE6 | Slewing Drive Performance Parameters
回转式减速器性能参数表

Data 参数 / Model 类型	Output Torque 输出转矩	Tilting Moment Torque 倾覆力矩	Holding Torque 保持力矩	Static Axial Rating 轴向静载荷	Static Radial Rating 径向静载荷	Dynamic Axial Rating 轴向动载荷	Dynamic Radial Rating 径向动载荷	Gear Ratio 减速比	Tracking Precision 精度等级	Weight 重量
VE6	2000 N.m	9 kN.m	10000 N.m	60 kN	120 kN	14.4 kN	63 kN	30 : 1	≤ 0.17°	45kg
	1480 lbf.ft	6642 lbf.ft	7375 lbf.ft	13488.7 lbf	26977.4 lbf	3237.1 lbf	14162.4 lbf			

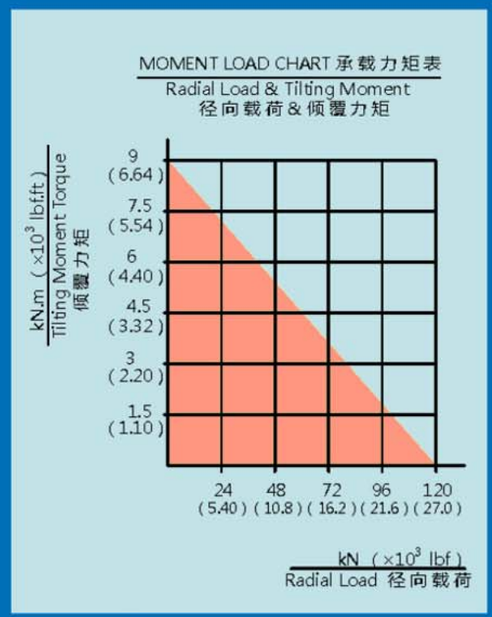

NOTICE 注意

▲ PLEASE BE SURE TO REMAIN UNDER THIS CURVE
选型时请确保实际载荷在曲线范围内

▲ This drawing is just for your reference
以上图纸仅供参考

▲ The drawing is subject to change due to new design without prior notice
本公司保留改进产品的权利而不再另行通知

VE7/PVE7 | SLEWING DRIVE 回转式减速器

Units (单位): mm
1 inch = 25.4 mm

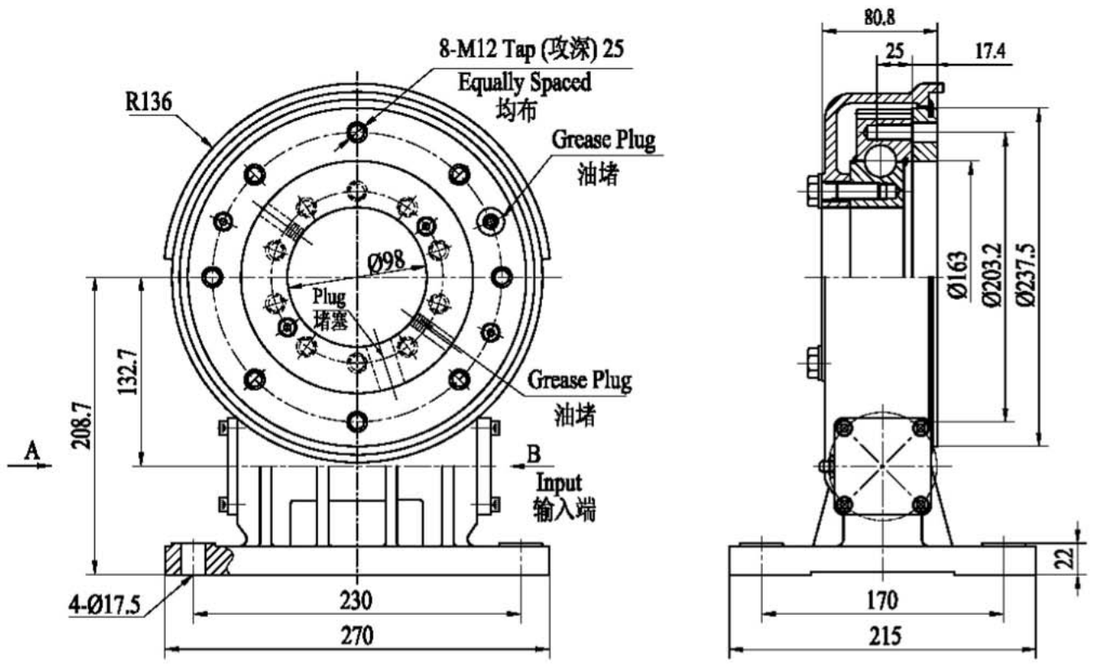

Wt: 37kg

VIEW A

A 向视图

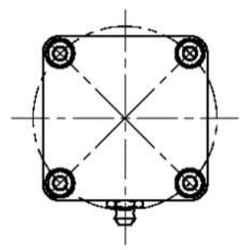

VIEW B

B 向视图

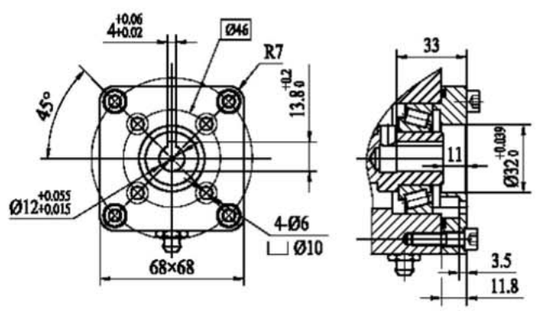

"A" VIEW AS INPUT IS AVAILABLE
输入端允许在"A"向视图

CUSTOMIZED UPON REQUESTS
可根据顾客的要求进行非标设计

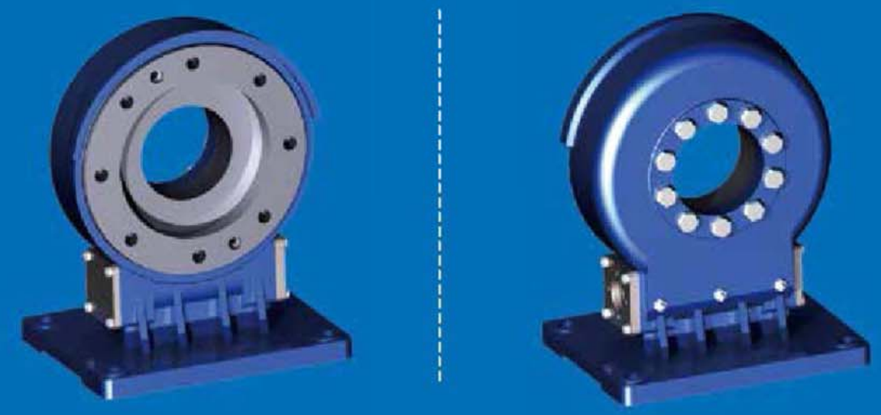

VE7/PVE7 | Slewing Drive Performance Parameters 回转式减速器性能参数表

Data 参数 / Model 类型	Output Torque 输出转矩	Tilting Moment Torque 倾覆力矩	Holding Torque 保持力矩	Static Axial Rating 轴向静载荷	Static Radial Rating 径向静载荷	Dynamic Axial Rating 轴向动载荷	Dynamic Radial Rating 径向动载荷	Gear Ratio 减速比	Tracking Precision 精度等级	Weight 重量
VE7	1500 N.m	6000 N.m	10400 N.m	133 kN	53 kN	32 kN	28 kN	73 : 1	≤ 0.2°	37kg
	1107 lbf.ft	4425 lbf.ft	7671 lbf.ft	29900 lbf	11915 lbf	7194 lbf	6295 lbf			
PVE7	1500 N.m	6000 N.m	10400 N.m	133 kN	53 kN	32 kN	28 kN	73 : 1	I :≤ 0.05° II :≤ 0.07° III :≤ 0.11°	37kg
	1107 lbf.ft	4425 lbf.ft	7671 lbf.ft	29900 lbf	11915 lbf	7194 lbf	6295 lbf			

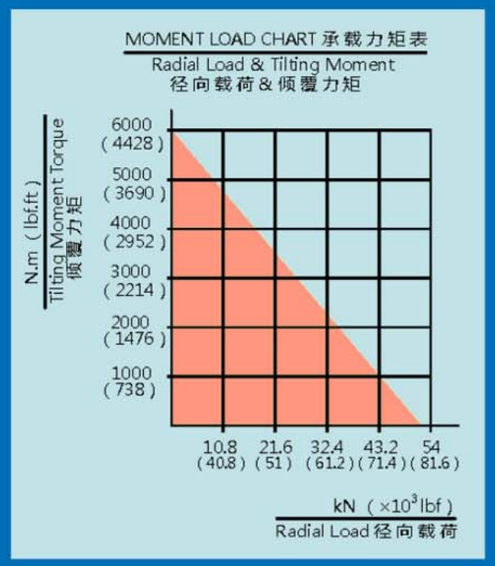

NOTICE 注意

▲ PLEASE BE SURE TO REMAIN UNDER THIS CURVE
选型时请确保实际载荷在曲线范围内

▲ This drawing is just for your reference
以上图纸仅供参考

▲ The drawing is subject to change due to new design without prior notice
本公司保留改进产品的权利而不再另行通知

VE7B | SLEWING DRIVE 回转式减速器

Units (单位): mm
1 inch = 25.4 mm

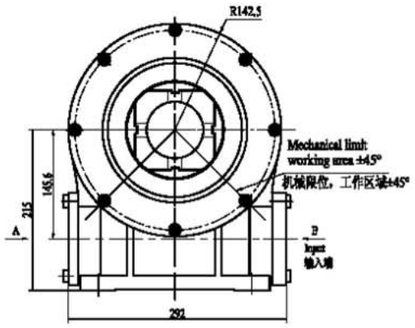

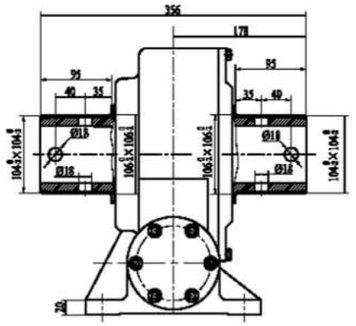

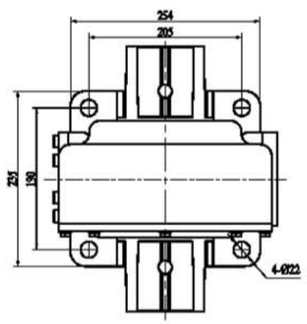

VIEW B OPTION

B 向 选项

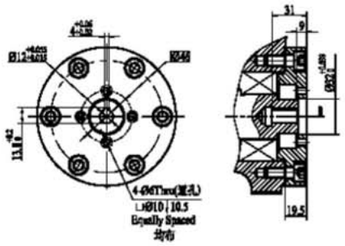

Wt: 65kg

Slewing Drive Performance Parameters
回转式减速器性能参数表

Data 参数 / Model 类型	Output Torque 输出转矩	Holding Torque 保持力矩	Gear Ratio 减速比	Tracking Precision 精度等级	Weight 重量
VE7B	5 kN.m	31 kN.m	48 : 1	≤ 0.2°	65kg
	1890 lbf.ft	22878 lbf.ft			

▲ This drawing is just for your reference
以上图纸仅供参考

▲ The drawing is subject to change due to new design without prior notice
本公司保留改进产品的权利而不再另行通知

"A" VIEW AS INPUT IS AVAILABLE
输入端允许在"A"向视图

CUSTOMIZED UPON REQUESTS
可根据顾客的要求进行非标设计

VE7C | SLEWING DRIVE 回转式减速器

Units (单位): mm
1 inch = 25.4 mm

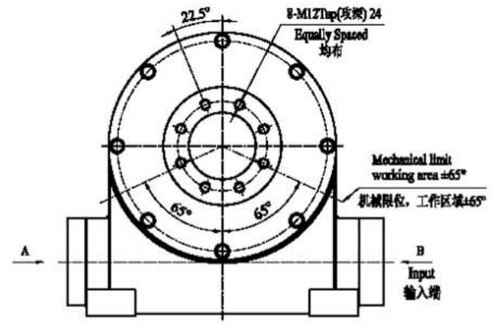

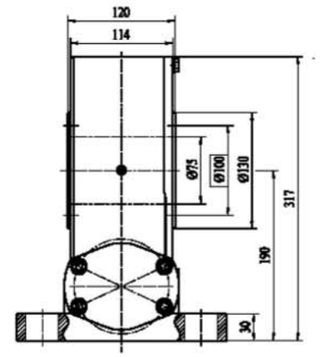

VIEW B OPTION

B 向 选项

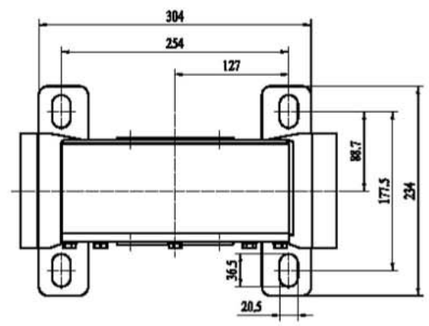

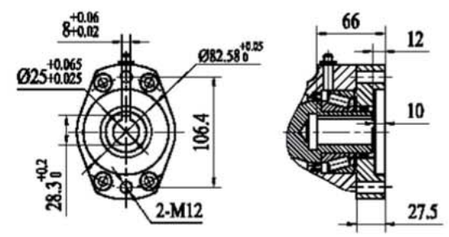

Ø12 Ø14 Ø16 Ø20 Ø25

NORMAL

Wt: 52.5kg

Slewing Drive Performance Parameters
回转式减速器性能参数表

Data 参数 / Model 类型	Output Torque 输出转矩	Holding Torque 保持力矩	Gear Ratio 减速比	Tracking Precision 精度等级	Weight 重量
VE7C	4.48 kN.m	27.23 kN.m	42 : 1	≤ 0.2°	52.5kg
	3306.24 lbf.ft	20095.74 lbf.ft			

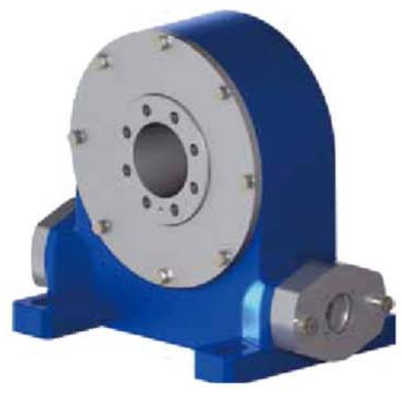

▲ This drawing is just for your reference
以上图纸仅供参考

▲ The drawing is subject to change due to new design without prior notice
本公司保留改进产品的权利而不再另行通知

VE9A/PVE9A | SLEWING DRIVE 回转式减速器

Units (单位): mm
1 inch = 25.4 mm

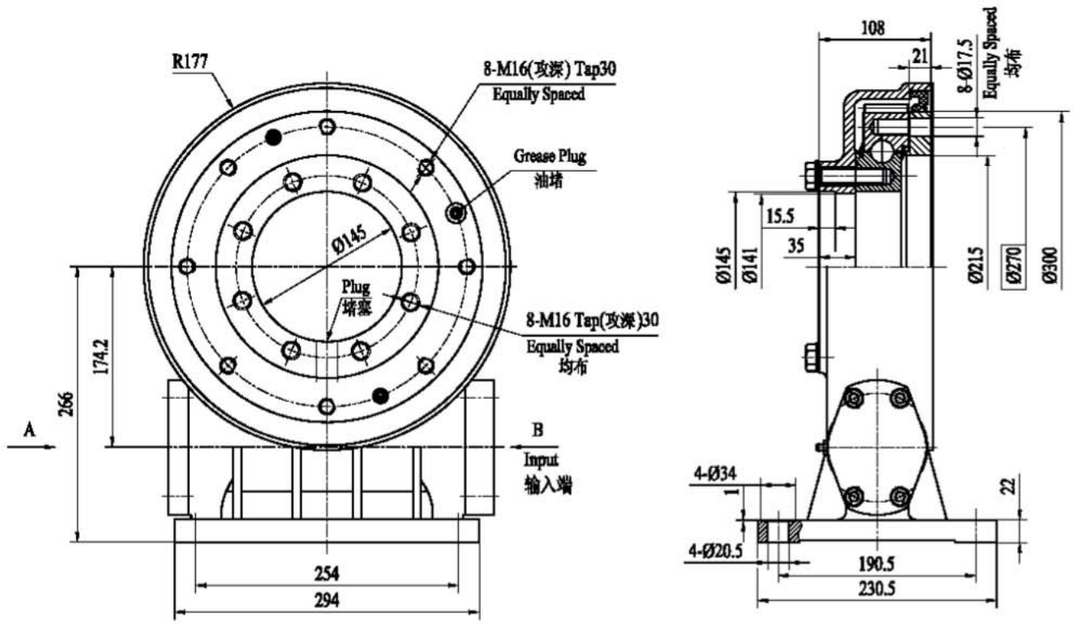

VIEW A OPTION

A 向选项

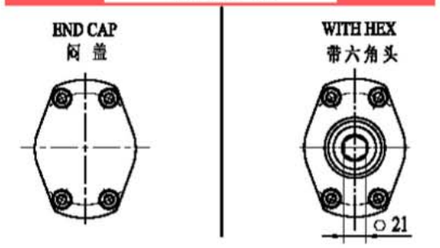

Wt: 58kg

VIEW B OPTION

B 向选项

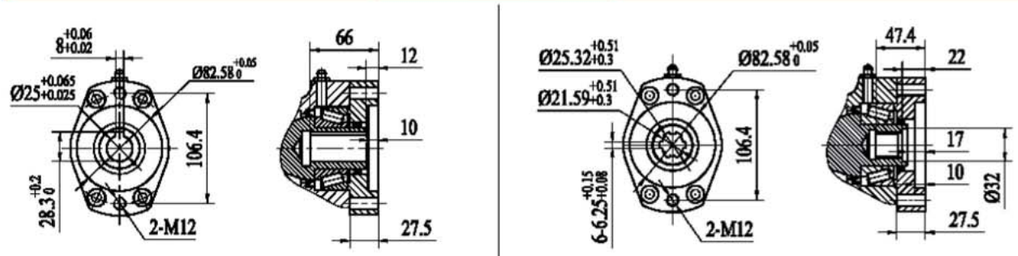

Ø12 Ø14 Ø16 Ø20 **Ø25**

■ NORMAL

6B SPLINE 花 键

"A" VIEW AS INPUT IS AVAILABLE
输入端允许在"A"向视图

CUSTOMIZED UPON REQUESTS
可根据顾客的要求进行非标设计

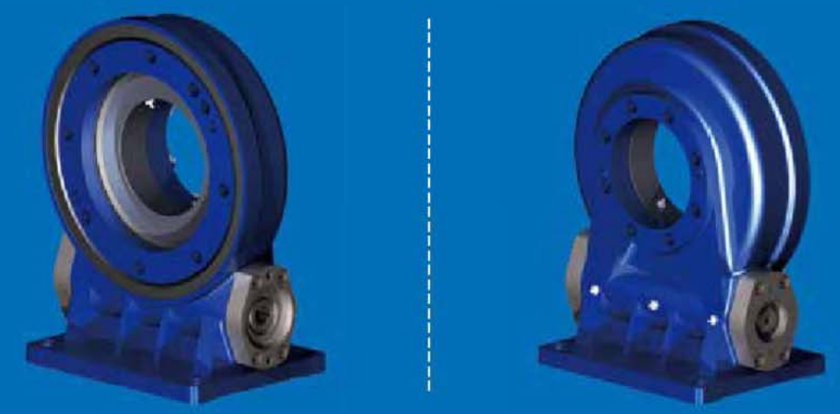

VE9A/PVE9A | Slewing Drive Performance Parameters 回转式减速器性能参数表

Data 参数 / Model 类型	Output Torque 输出转矩	Tilting Moment Torque 倾覆力矩	Holding Torque 保持力矩	Static Axial Rating 轴向静载荷	Static Radial Rating 径向静载荷	Dynamic Axial Rating 轴向动载荷	Dynamic Radial Rating 径向动载荷	Gear Ratio 减速比	Tracking Precision 精度等级	Weight 重量
VE9A	6.5 kN.m	12 kN.m	12 kN.m	338 kN	120 kN	81 kN	61kN	61 : 1	≤ 0.17°	58kg
	4794 lbf.ft	8851 lbf.ft	8851 lbf.ft	76×10^3 lbf	27×10^3 lbf	18×10^3 lbf	14×10^3 lbf			
PVE9A	6.5 kN.m	12 kN.m	12 kN.m	338 kN	120 kN	81 kN	61kN	61 : 1	Ⅰ:≤ 0.05° Ⅱ:≤ 0.07° Ⅲ:≤ 0.09°	58kg
	4794 lbf.ft	8851 lbf.ft	8851 lbf.ft	76×10^3 lbf	27×10^3 lbf	18×10^3 lbf	14×10^3 lbf			

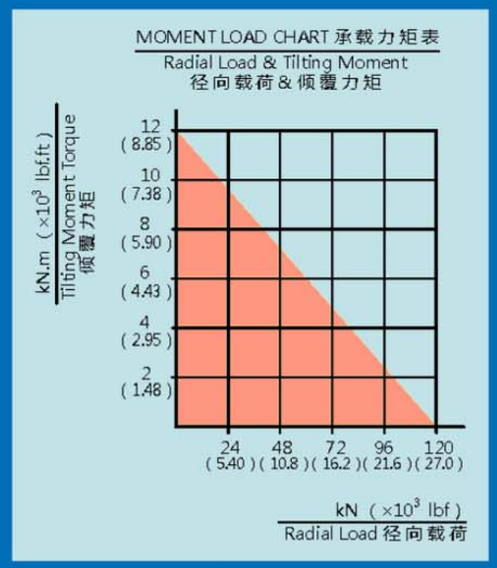

NOTICE 注意

▲ PLEASE BE SURE TO REMAIN UNDER THIS CURVE
选型时请确保实际载荷在曲线范围内

▲ This drawing is just for your reference
以上图纸仅供参考

▲ The drawing is subject to change due to new design without prior notice
本公司保留改进产品的权利而不再另行通知

VE17/PVE17 | SLEWING DRIVE 回转式减速器

Units (单位): mm
1 inch = 25.4 mm

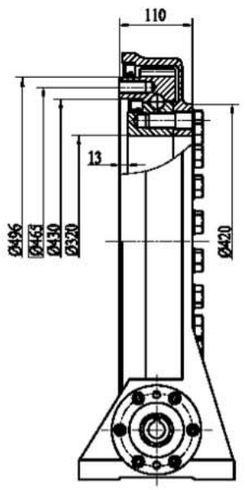

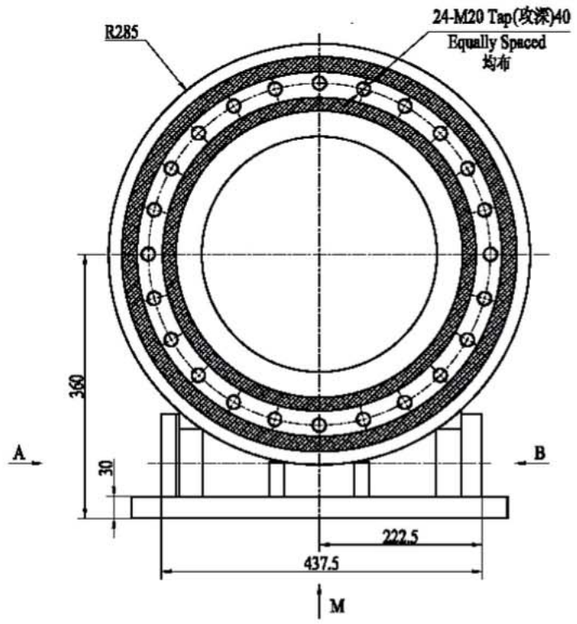

Wt: 150kg

VIEW A OPTION
A 向选项

END CAP
闷盖

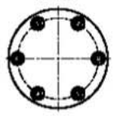

VIEW M OPTION
M 向选项

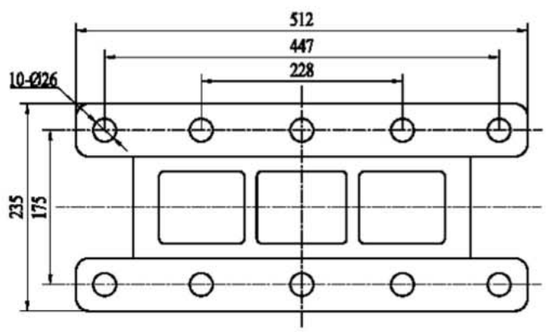

VIEW B OPTION
B 向选项

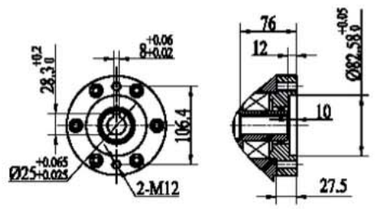

"A" VIEW AS INPUT IS AVAILABLE
输入端允许在"A"向视图

CUSTOMIZED UPON REQUESTS
可根据顾客的要求进行非标设计

VE17/PVE17 | Slewing Drive Performance Parameters 回转式减速器性能参数表

Data 参数 / Model 类型	Output Torque 输出转矩	Tilting Moment Torque 倾覆力矩	Holding Torque 保持力矩	Static Axial Rating 轴向静载荷	Static Radial Rating 径向静载荷	Gear Ratio 减速比	Tracking Precision 精度等级	Weight 重量
VE17	20 kN.m	65 kN.m	75 kN.m	50 kN	120 kN	81 : 1	≤ 0.15°	150kg
	14.76 × 10^3 lbf.ft	47.97 × 10^3 lbf.ft	55.35 × 10^3 lbf.ft	11.2 × 10^3 lbf	26.98 × 10^3 lbf			
PVE17	20 kN.m	65 kN.m	75 kN.m	50 kN	120 kN	81 : 1	I :≤ 0.05° II :≤ 0.07° III :≤ 0.09°	150kg
	14.76 × 10^3 lbf.ft	47.97 × 10^3 lbf.ft	55.35 × 10^3 lbf.ft	11.2 × 10^3 lbf	26.98 × 10^3 lbf			

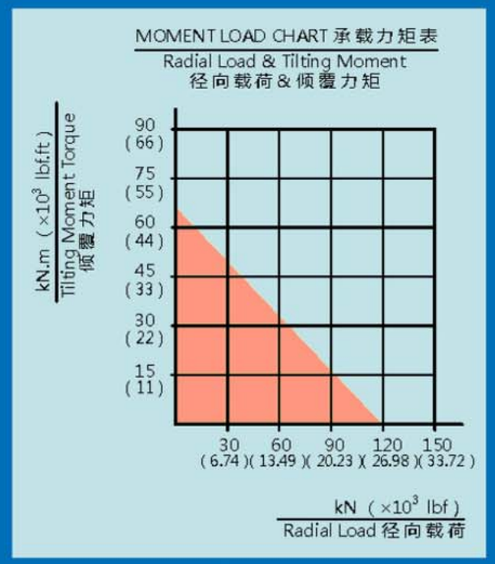

NOTICE 注意

▲ PLEASE BE SURE TO REMAIN UNDER THIS CURVE
选型时请确保实际载荷在曲线范围内

▲ This drawing is just for your reference
以上图纸仅供参考

▲ The drawing is subject to change due to new design without prior notice
本公司保留改进产品的权利而不再另行通知

VE21/PVE21 | SLEWING DRIVE 回转式减速器

Units (单位): mm
1 inch = 25.4 mm

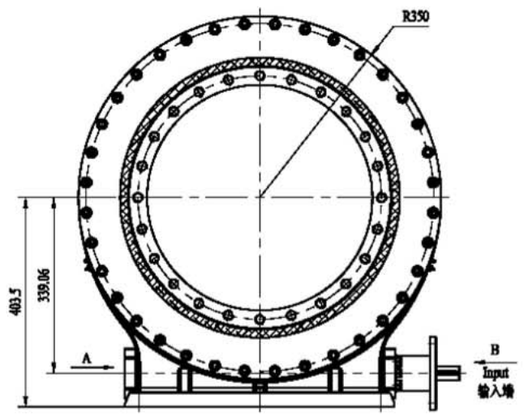

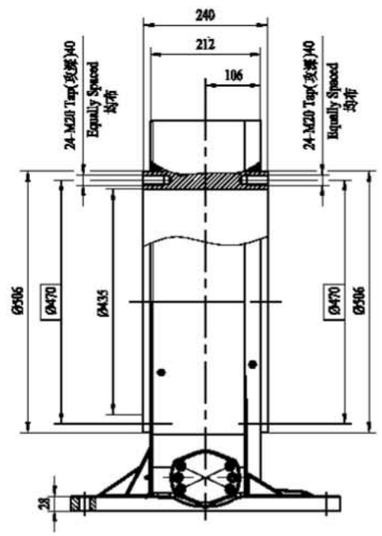

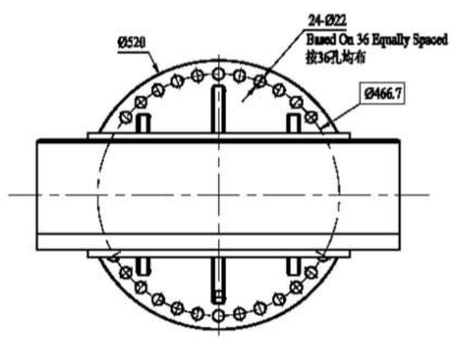

VIEW A OPTION

A 向选项

END CAP
闷 盖

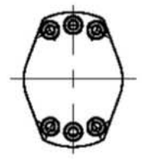

VIEW B OPTION

B 向选项

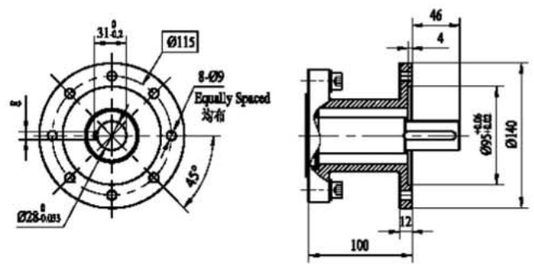

Wt: 370kg

"A" VIEW AS INPUT IS AVAILABLE
输入端允许在"A"向视图

CUSTOMIZED UPON REQUESTS
可根据顾客的要求进行非标设计

VE21/PVE21 | Slewing Drive Performance Parameters 回转式减速器性能参数表

Model 类型 \ Data 参数	Output Torque 输出转矩	Tilting Moment Torque 倾覆力矩	Holding Torque 保持力矩	Static Axial Rating 轴向静载荷	Static Radial Rating 径向静载荷	Gear Ratio 减速比	Tracking Precision 精度等级	Weight 重量
VE21	23 kN.m	100 kN.m	105.8 kN.m	80 kN	160 kN	125 : 1	≤ 0.15°	370kg
	16.97 × 10^3 lbf.ft	73.80 × 10^3 lbf.ft	78.08 × 10^3 lbf.ft	17.98 × 10^3 lbf	35.97 × 10^3 lbf			
PVE21	23 kN.m	100 kN.m	105.8 kN.m	80 kN	160 kN	125 : 1	I :≤ 0.05° II :≤ 0.07° III :≤ 0.09°	370kg
	16.97 × 10^3 lbf.ft	73.80 × 10^3 lbf.ft	78.08 × 10^3 lbf.ft	17.98 × 10^3 lbf	35.97 × 10^3 lbf			

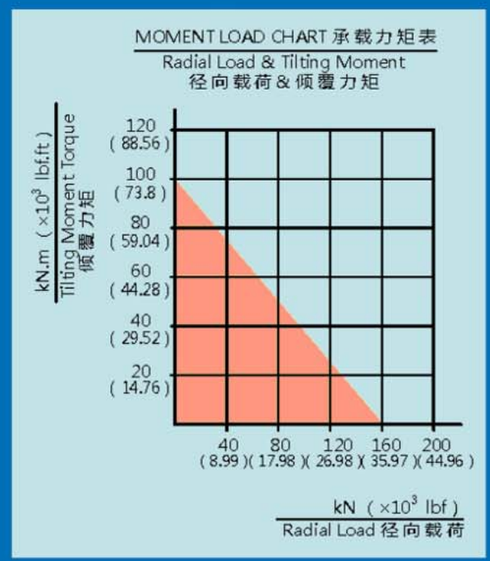

NOTICE 注意

▲ PLEASE BE SURE TO REMAIN UNDER THIS CURVE
选型时请确保实际载荷在曲线范围内

▲ This drawing is just for your reference
以上图纸仅供参考

▲ The drawing is subject to change due to new design without prior notice
本公司保留改进产品的权利而不再另行通知

AD63 | WORM DRIVE 回转式减速器

Units (单位): mm
1 inch = 25.4 mm

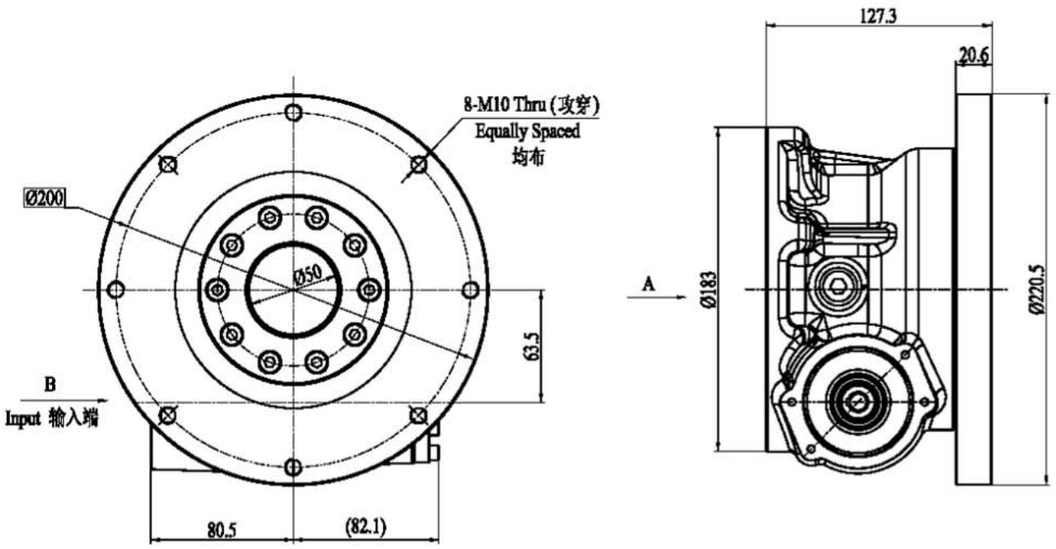

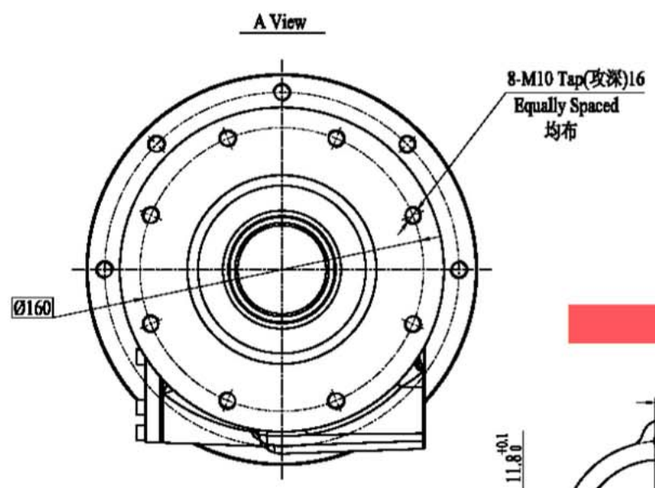

Wt: 18kg

VIEW B OPTION
B 向 选项

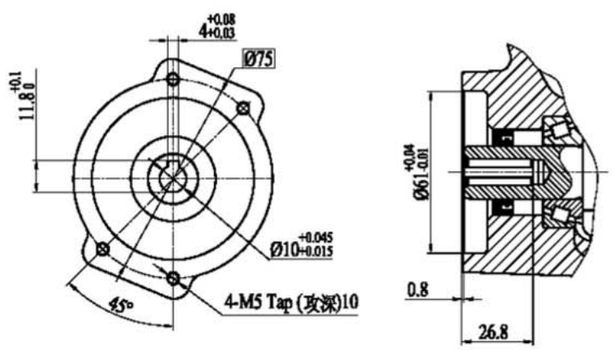

◆Double Enveloping
双包络传动设计

CUSTOMIZED UPON REQUESTS
可根据顾客的要求进行非标设计

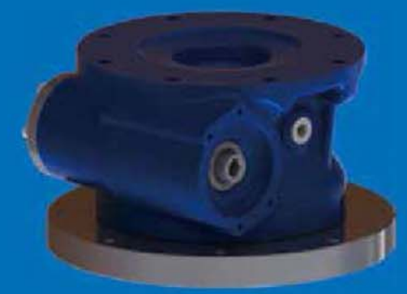

AD63 | Worm Drive Performance Parameters
回转式减速器性能参数表

Data 参数 / Model 类型	Output Torque 输出转矩	Output Torque (Max) 最大输出转矩	Tilting Moment Torque 倾覆力矩	Holding Torque 保持力矩	Static Axial Rating 轴向静载荷	Gear Ratio 减速比	Tracking Precision 精度等级	Weight 重量
AD63	300 N.m	600 N.m	5000 N.m	3000 N.m	2500 N	60 : 1	≤ 0.07°	18kg
	221.4 lbf.ft	442.8 lbf.ft	3690 lbf.ft	2214 lbf.ft	562 lbf			

Greater Torque, Better Durability, Higher Shock Load Capacity, Downsize to Save Space, Higher Precision
更大的输出转矩 | 耐久更卓越 | 冲击载荷更强 | 节约空间尺寸 | 传动精度更高

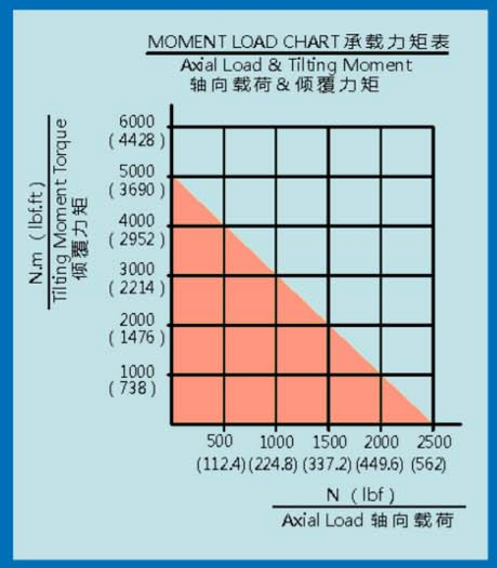

NOTICE 注意

▲ PLEASE BE SURE TO REMAIN UNDER THIS CURVE
选型时请确保实际载荷在曲线范围内

▲ This drawing is just for your reference
以上图纸仅供参考

▲ The drawing is subject to change due to new design without prior notice
本公司保留改进产品的权利而不再另行通知

AD80 | WORM DRIVE 回转式减速器

Units (单位): mm
1 inch = 25.4 mm

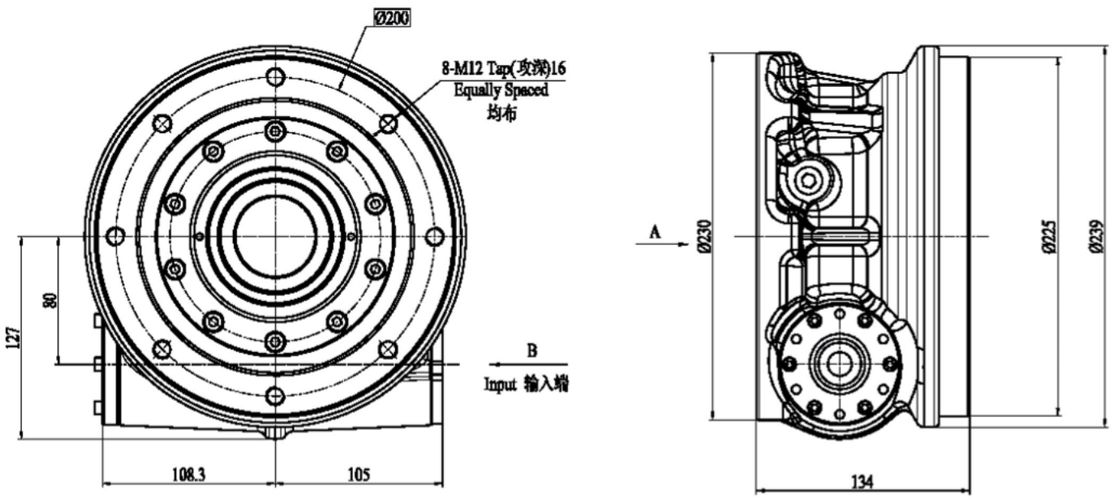

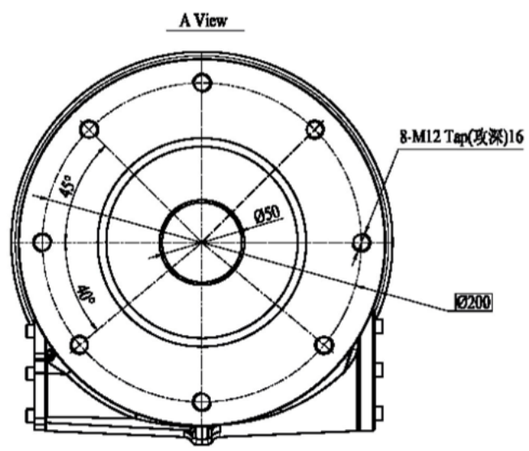

Wt: 22.5kg

VIEW B OPTION
B 向 选项

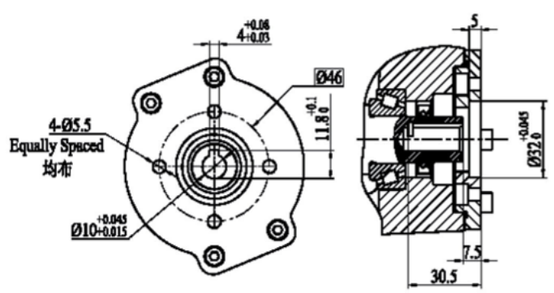

◆***Double Enveloping***
双包络传动设计

CUSTOMIZED UPON REQUESTS
可根据顾客的要求进行非标设计

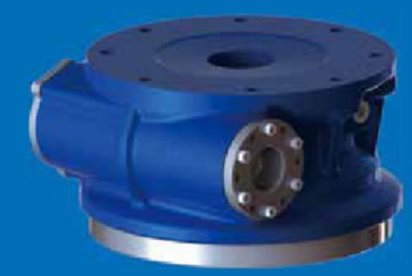

AD80 | Worm Drive Performance Parameters
回转式减速器性能参数表

Data 参数 / Model 类型	Output Torque 输出转矩	Output Torque (Max) 最大输出转矩	Tilting Moment Torque 倾覆力矩	Holding Torque 保持力矩	Static Axial Rating 轴向静载荷	Gear Ratio 减速比	Tracking Precision 精度等级	Weight 重量
AD80	380 N.m	700 N.m	7000 N.m	4000 N.m	4500 N	60 : 1	≤ 0.07°	22.5 kg
	280.4 lbf.ft	516.6 lbf.ft	5166 lbf.ft	2952 lbf.ft	1011.6 lbf			

Greater Torque, Better Durability, Higher Shock Load Capacity, Downsize to Save Space, Higher Precision
更大的输出转矩 | 耐久更卓越 | 冲击载荷更强 | 节约空间尺寸 | 传动精度更高

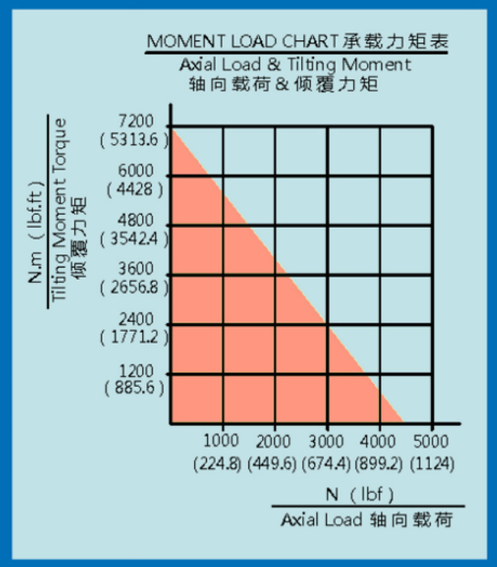

NOTICE 注意

▲ PLEASE BE SURE TO REMAIN UNDER THIS CURVE
选型时请确保实际载荷在曲线范围内

▲ This drawing is just for your reference
以上图纸仅供参考

▲ The drawing is subject to change due to new design without prior notice
本公司保留改进产品的权利而不再另行通知

WVP5 | WORM DRIVE 回转式减速器

Units (单位): mm
1 inch = 25.4 mm

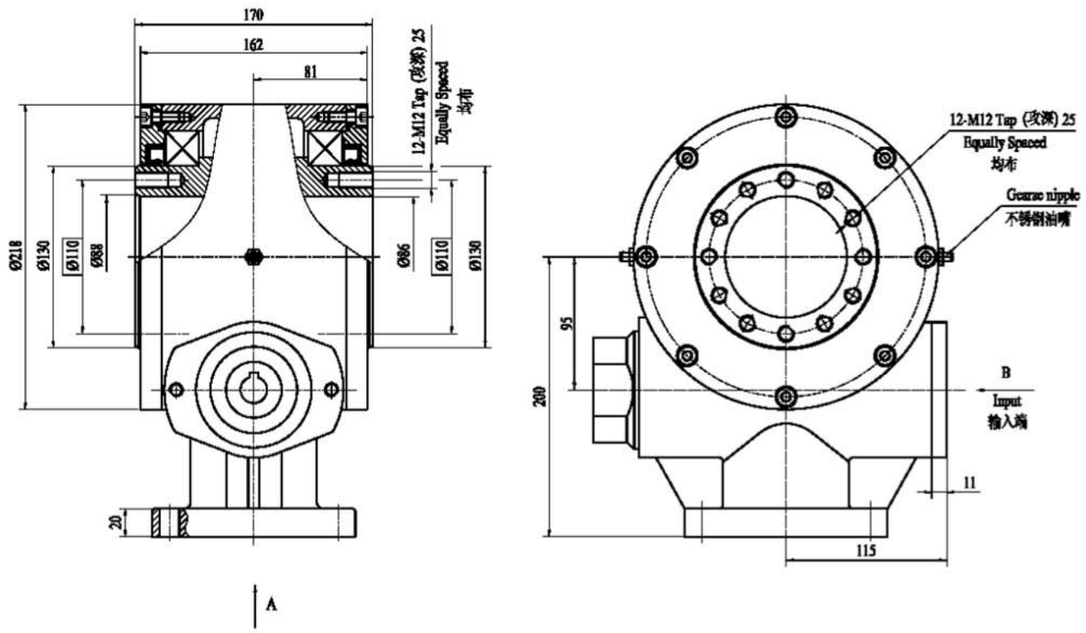

Wt: 32.5kg

VIEW A
A 向视图

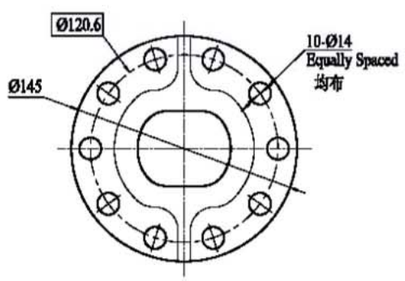

VIEW B
B 向视图

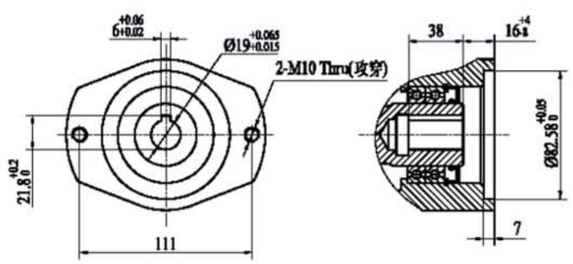

Ø12 Ø14 Ø16 Ø20 Ø25

■ NORMAL

"A" VIEW AS INPUT IS AVAILABLE
输入端允许在"A"向视图

CUSTOMIZED UPON REQUESTS
可根据顾客的要求进行非标设计

WVP5 | Worm Drive Performance Parameters
回转式减速器性能参数表

Data 参数 / Model 类型	Output Torque 输出转矩	Tilting Moment Torque 倾覆力矩	Holding Torque 保持力矩	Static Axial Rating 轴向静载荷	Static Radial Rating 径向静载荷	Gear Ratio 减速比	Tracking Precision 精度等级	Weight 重量
WVP5	2000 N.m	10 kN.m	9000 N.m	60 kN	120 kN	28 : 1	≤ 0.05°	32.5kg
	1476 lbf.ft	7380 lbf.ft	6642 lbf.ft	13488 lbf	26976 lbf			

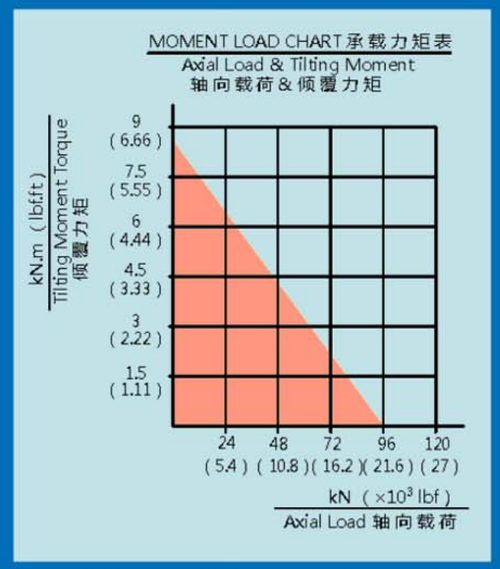

NOTICE 注意

▲ PLEASE BE SURE TO REMAIN UNDER THIS CURVE
选型时请确保实际载荷在曲线范围内

▲ This drawing is just for your reference
以上图纸仅供参考

▲ The drawing is subject to change due to new design without prior notice
本公司保留改进产品的权利而不再另行通知

WDE3 | SLEWING DRIVE 回转式减速器

Units (单位): mm
1 inch = 25.4 mm

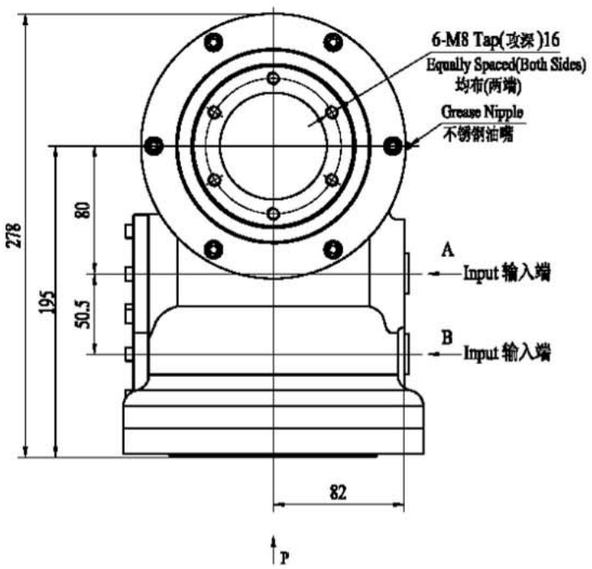

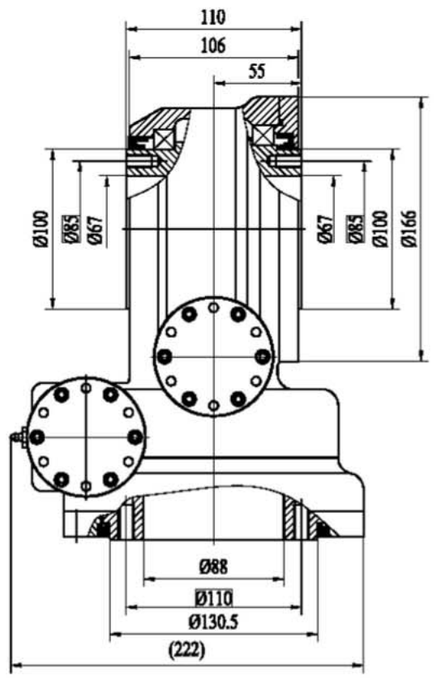

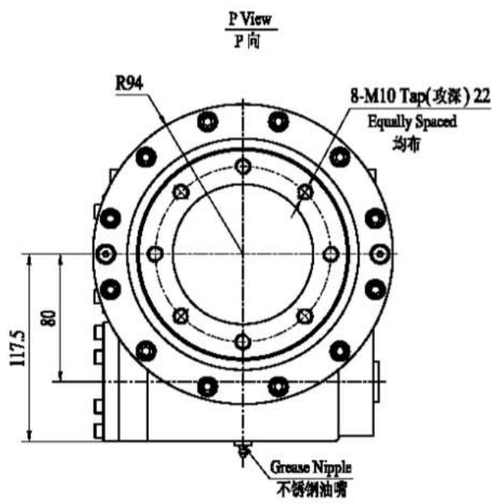

Wt: 26kg

VIEW A&B OPTION

A&B 向视图

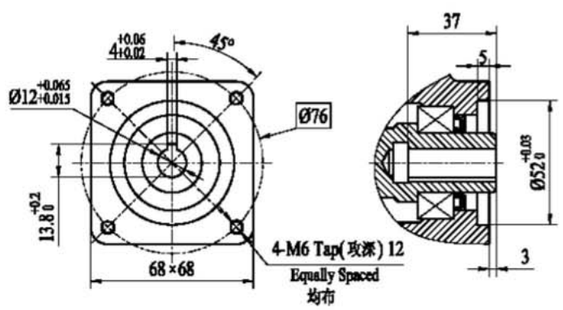

"A" & "D" VIEW AS INPUT IS AVAILABLE
输入端允许在'A" & "D"向视图

CUSTOMIZED ACCORDING TO REQUESTS
可根据顾客的要求进行非标设计

WDE3 | Worm Drive Performance Parameters 回转式减速器性能参数表

Data 参数 / Model 类型	Output Torque 输出转矩	Tilting Moment Torque 倾覆力矩	Holding Torque 保持力矩	Static Axial Rating 轴向静载荷	Static Radial Rating 径向静载荷	Gear Ratio 减速比	Tracking Precision 精度等级	Weight 重量
WDE3	400 N.m	2000 N.m	2000 N.m	30 kN	15 kN	62 : 1	≤ 0.1°	26kg
	295 lbf.ft	1475 lbf.ft	1475 lbf.ft	6744 lbf	3372 lbf			

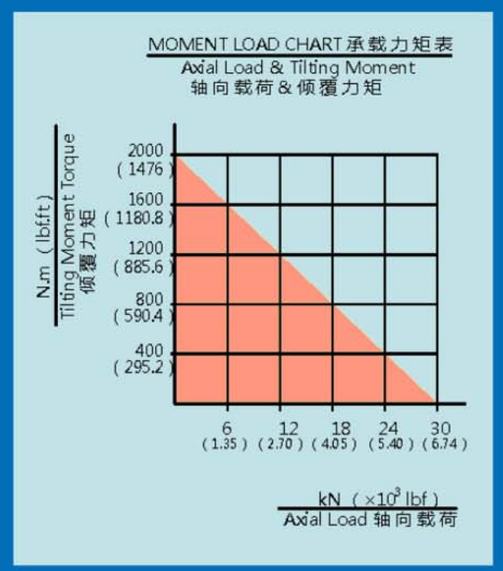

NOTICE 注意

▲ PLEASE BE SURE TO REMAIN UNDER THIS CURVE
选型时请确保实际载荷在曲线范围内

▲ This drawing is just for your reference
以上图纸仅供参考

▲ The drawing is subject to change due to new design without prior notice
本公司保留改进产品的权利而不再另行通知

SDE3/PDE3 | SLEWING DRIVE 回转式减速器

Units (单位): mm
1 inch = 25.4 mm

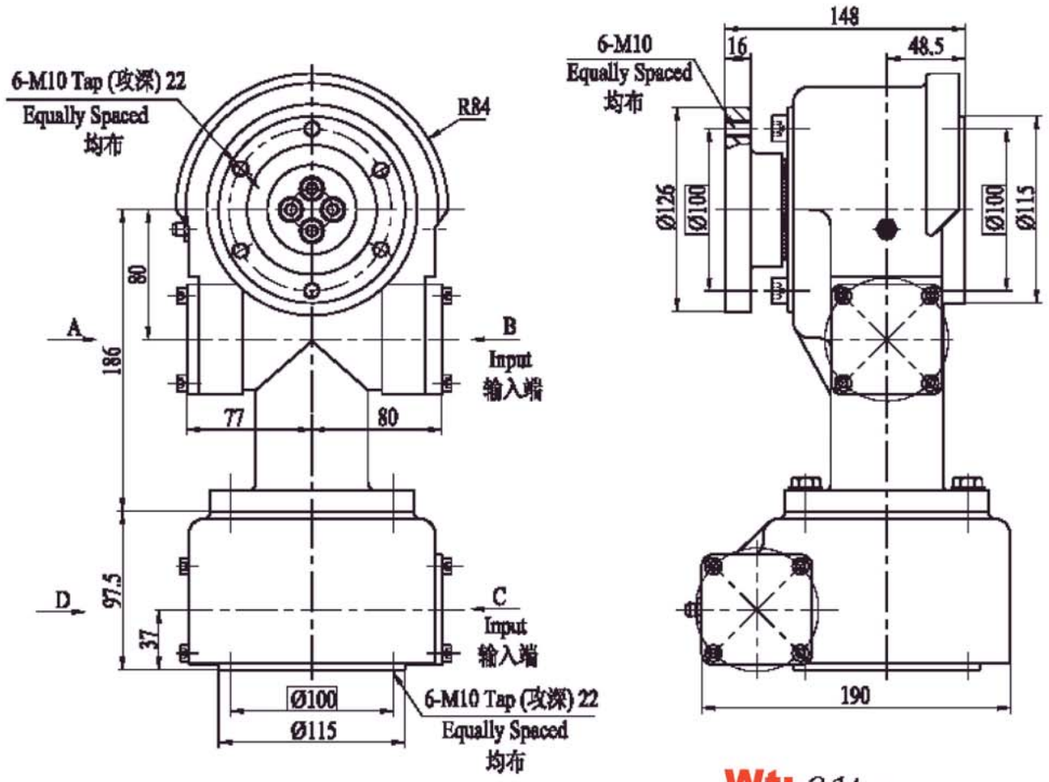

Wt: *21kg*

VIEW A&D OPTION
A&D 向视图

END CAP
闷 盖

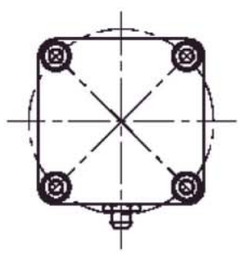

VIEW B&C OPTION
B&C 向视图

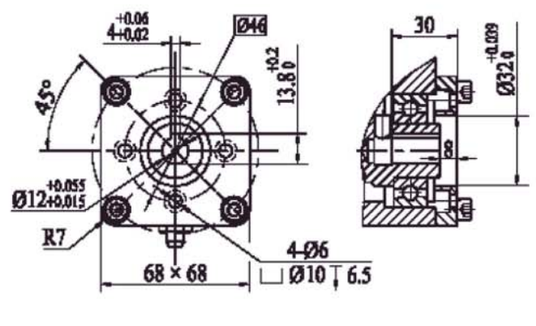

"A" & "D" VIEW AS INPUT IS AVAILABLE
输入端允许在"A" & "D"向视图

CUSTOMIZED ACCORDING TO REQUESTS
可根据顾客的要求进行非标设计

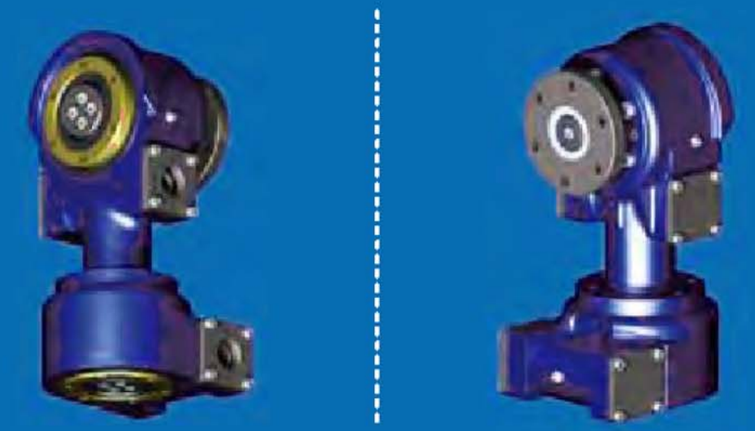

SDE3/PDE3 | Slewing Drive Performance Parameters 回转式减速器性能参数表

Model 类型 \ Data 参数	Output Torque 输出转矩	Tilting Moment Torque 倾覆力矩	Holding Torque 保持力矩	Static Axial Rating 轴向静载荷	Static Radial Rating 径向静载荷	Dynamic Axial Rating 轴向动载荷	Dynamic Radial Rating 径向动载荷	Gear Ratio 减速比	Tracking Precision 精度等级	Weight 重量
SDE3	400 N.m	500 N.m	2000 N.m	30 kN	15 kN	9.6 kN	8.4 kN	62 : 1	≤ 0.2°	32kg
	295 lbf.ft	369 lbf.ft	1475 lbf.ft	6744 lbf	3372 lbf	2158 lbf	1888 lbf			
PDE3	400 N.m	500 N.m	2000 N.m	30 kN	15 kN	9.6 kN	8.4 kN	62 : 1	I : ≤ 0.08° II : ≤ 0.12° III : ≤ 0.15°	32kg
	295 lbf.ft	369 lbf.ft	1475 lbf.ft	6744 lbf	3372 lbf	2158 lbf	1888 lbf			

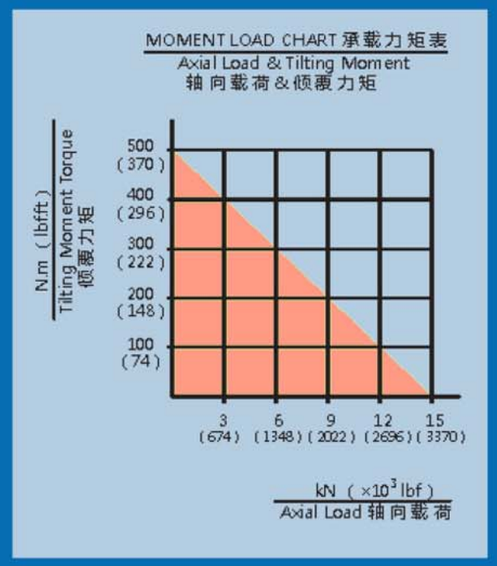

NOTICE 注意

▲ PLEASE BE SURE TO REMAIN UNDER THIS CURVE
选型时请确保实际载荷在曲线范围内

▲ This drawing is just for your reference
以上图纸仅供参考

▲ The drawing is subject to change due to new design without prior notice
本公司保留改进产品的权利而不再另行通知

SDE7A/5-12/19R | SLEWING DRIVE 回转式减速器

Units (单位): mm
1 inch = 25.4 mm

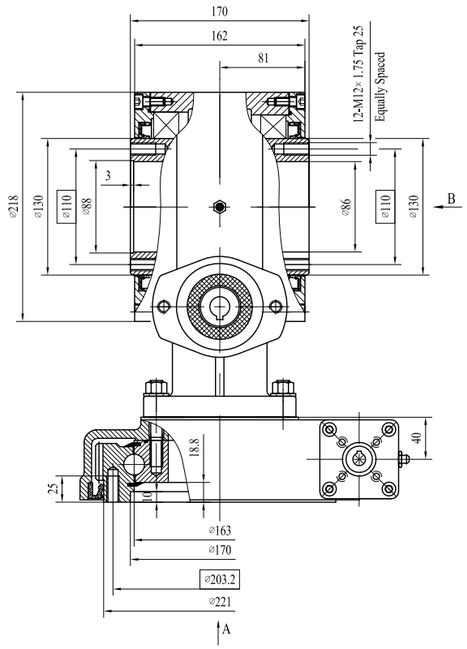

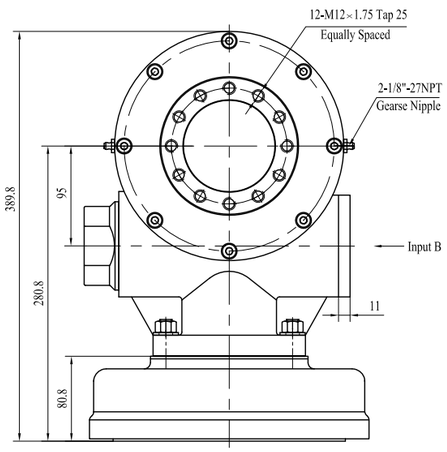

C 向 选项

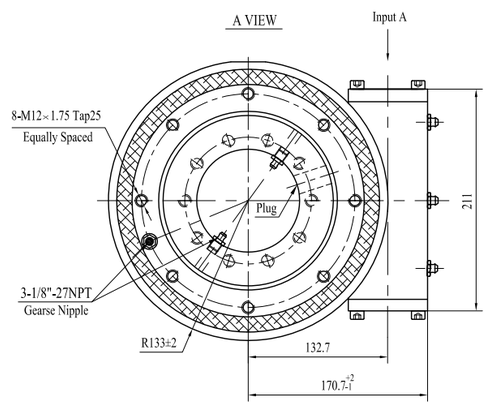

A&B 向 选项

Wt: 52 kg

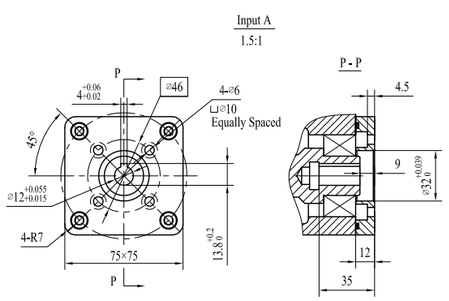

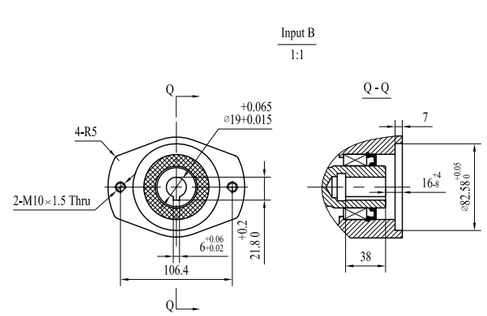

"A" & "D" VIEW AS INPUT IS AVAILABLE
输入端允许在"A" & "D"向视图

CUSTOMIZED ACCORDING TO REQUESTS
可根据顾客的要求进行非标设计

SDE7A/5-12/19R SLEWING DRIVE

Slewing Drive Performance Data(Elevation)		*Slewing Drive Performance Data(Azimuth)*	
Rated Output Speed	< 2.5 rpm	Rated Output Speed	< 2.5 rpm
Ratio of Worm Gear	28:1	Ratio of Worm Gear	73:1
Rated Output Torque	2000 N.m	Rated Output Torque	1500 N.m
Holding Torque	10000N.m	Holding Torque	10400N.m
Tilting Moment Torque （Max.）	9000N.m	Tilting Moment Torque （Max.）	13500N.m
Radial Load （Max.）	120 kN	Radial Load （Max.）	53kN
Axial Load （Max.）	60 kN	Axial Load （Max.）	133kN
Tracking Precision	≤0.2 °	Tracking Precision	≤0.2 °

MOMENT LOAD CHART(Elevation)

Axial Load & Tilting Moment

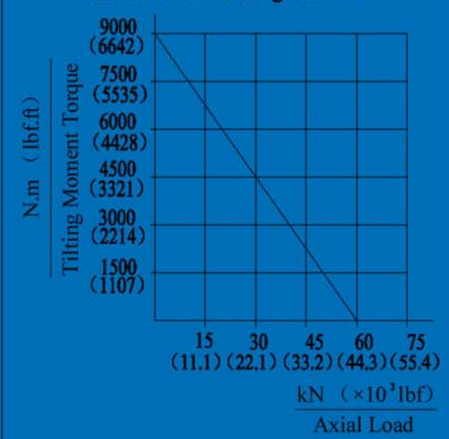

MOMENT LOAD CHART

Axial Load & Tilting Moment

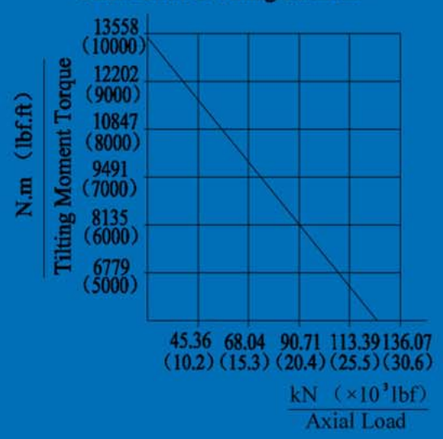

JB-T2300-1999 | SLEWING RING 回转支承

Single-row four point contact ball 单排四点接触球式

Slewing bearing size and gear parameters 回转支承尺寸及齿轮参数
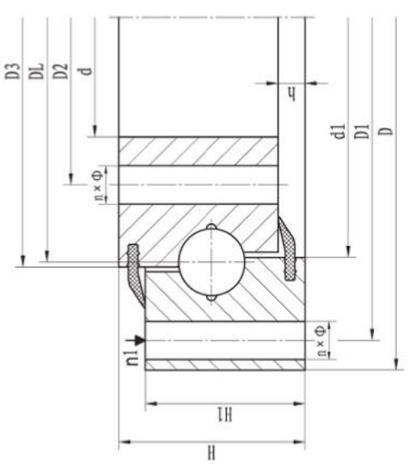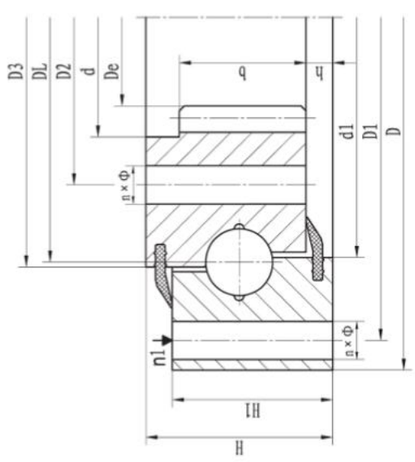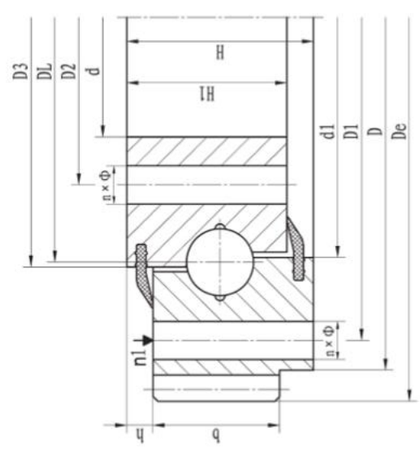
No. 序号	Type型号/Date参数			External Dimensions 外形尺寸			Installation Dimensions 安装尺寸				Structure Dimensions 结构尺寸					Gear Parameters 齿轮参数				
	Without Teeth DL 无齿式	Outer Teeth DL 外齿式	Inner Teeth DL 内齿式	D	d	H	D1	D2	n	Ø	Grease Nipple No.(n1) 油口数量	D3	d1	H1	h	b	Deflection(x) 变位	MOD(x) 模数	D3	Teeth No.(z) 齿数
1				280	120	60	248	152	12	16/M14	2	201	199	50	10	40		3	300	98
2	010.20.224	011.20.224	013.20.224	304	144		272	176				225	223						312	105
3	010.20.250	011.20.250	013.20.250	330	170		298	202	18			251	249					4	352	86
4	010.22.280	011.22.280	013.22.280	360	200		328	232				281	279						348	94
5	010.25.315	011.25.315	013.25.315	408	222	70	372	258	20	18/M16		316	314	60		50		5	435	85
6	010.25.355	011.25.355	013.25.355	448	262		412	298				356	354						475	93
7	010.20.400	011.20.400	013.20.400	493	307		457	343	24			401	399					6	528	86
8	010.20.450	011.20.450	013.20.450	543	357		507	393				451	449						576	94
9	010.30.500	011.30.500	013.30.500	602	398	80	566	434	20	18	4	501	498	70	10	60	0.5	5	629	123
10		012.30.500	014.30.500							M16								6	628.8	102
11	010.25.500	011.25.500	013.25.500	602	398	80	566	434	20	18	4	501	499	70	10	60	0.5	5	629	123
12		012.25.200	014.25.500							M16								6	628.8	102
13	010.30.560	011.30.560	013.30.560	662	458	80	626	494	20	18	4	561	558	70	10	60	0.5	5	689	135
14		012.30.560	014.30.560							M16								6	688.8	112
15	010.25.560	011.25.560	013.25.560	662	458	80	626	494	20	18	4	561	559	70	10	60	0.5	5	689	135
16		012.25.560	014.25.560							M16								6	688.8	112
17	010.30.630	011.30.630	013.30.630	732	528	80	696	564	24	18	4	631	628	70	10	60	0.5	6	722.8	126
18		012.30.630	014.30.630							M16								8	774.4	94
19	010.25.630	011.25.630	013.25.630	732	528	80	696	564	24	18	4	631	629	70	10	60	0.5	6	772.8	126
20		012.25.630	014.25.630							M16								8	774.4	94
21	010.30.710	011.30.710	013.30.710	812	608	80	776	644	24	18	4	711	708	70	10	60	0.5	6	850.8	139
22		012.30.710	014.30.710							M16								8	854.4	104
23	010.25.710	011.25.710	013.25.710	812	608	80	776	644	24	18	4	711	709	70	10	60	0.5	6	850.8	139
24		012.25.710	014.25.710							M16								8	854.4	104
25	010.40.800	011.40.800	013.40.800	922	678	100	878	722	30	22	6	801	798	90	10	80	0.5	8	966.4	118
26		012.40.800	014.40.800							M20								10	968	94
27	010.30.800	011.30.800	013.30.800	922	678	100	878	722	30	22	6	801	798	90	10	80	0.5	8	966.4	118
28		012.30.800	014.30.800							M20								10	968	94